INSTALLATION INSTRUCTIONS AND OWNER'S MANUAL

Boulevard
VENT-FREE LINEAR FIREPLACES

INSTALLER:
Leave this manual with the appliance.

CONSUMER:
Retain this manual for future reference.

CONTEMPORARY LINEAR VENT-FREE GAS FIREPLACE MODELS

VFLL60FP90L(N,P)-1
VFLL72FP90L(N,P)-1

⚠ WARNING

If the information in this manual is not followed exactly, a fire or explosion may result causing property damage, personal injury or loss of life.

- **Do not store or use gasoline or other flammable vapors and liquids in the vicinity of this or any other appliance.**
- **WHAT TO DO IF YOU SMELL GAS**
  - **Do not try to light any appliance.**
  - **Do not touch any electrical switch; do not use any phone in your building.**
  - **Immediately call your gas supplier from a neighbor's phone. Follow the gas supplier's instructions.**
  - **If you cannot reach your gas supplier, call the fire department.**
- **Installation and service must be performed by a qualified installer, service agency or the gas supplier.**

This appliance may be installed in an aftermarket, permanently located, manufactured (mobile) home, where not prohibited by local codes.
This appliance is only for use with the type of gas indicated on the rating plate. This appliance is not convertible for use with other gases.

This is an unvented gas-fired heater. It uses air (oxygen) from the room in which it is installed. Provisions for adequate combustion and ventilation air must be provided.
Refer to pages 15.

GAS-FIRED
UL LISTED
UL FILE NO. MH46389

This series is design certified in accordance with American National Standard Institute (ANSI) Z21.11.2 by the Canadian Standards Association Laboratories (CSA) as an Unvented Room Fireplace and should be installed according to these instructions.

NATIONAL FIREPLACE INSTITUTE
NFI CERTIFIED
www.nficertified.org

We suggest that our gas hearth products be installed and serviced by professionals who are certified in the U.S. by the National Fireplace Institute® (NFI) as NFI Gas Specialists.

⚠ WARNING

HOT GLASS WILL CAUSE BURNS.
DO NOT TOUCH GLASS UNTIL COOLED.
NEVER ALLOW CHILDREN TO TOUCH GLASS.

TABLE OF CONTENTS

SECTION	PAGE
Before You Start	3
Carton Contents	5
Hardware Pack	6
Important Soot Prevention Steps	7
Product Specifications	8
Homeowner Reference Information	8
Accessories	9
Introduction	10
Important Information	11
Important Safety Information	12
Safety Information for Users of LP-Gas	13
Important Installation Guidelines	14
Water Vapor: A By-Product of Unvented Room Heaters	14
Provisions for Adequate Combustion & Ventilation Air	15
Fireplace Dimensions	16
Junction Box Wiring Installation	17
Gas Supply	18
Clearances	19
Installation Option 1 - Clean Face	**20**
Framing - Clean Face	21
Nailing Flanges & Mounting Brackets - Clean Face	22
Fireplace & Non-Combustible Board Installation - Clean Face	23
Installation Option 2 - Flush Mount	**25**
Framing - Flush Mount	26
Nailing Flanges & Mounting Brackets - Flush Mount	27
Fireplace & Non-Combustible Board Installation - Flush Mount	28
Completing Installation - Clean Face & Flush Mount	30
Fireplace Wiring	31
LED Wiring	32
Decorative Glass Installation	33
Lighting Instructions	35
Pilot Flame Characteristics	36
Flame Appearance	36
Proflame - IP Control System	37
Operating Instructions	38
Cleaning and Service	39
Testing the Gas Supply Pressure	40
Troubleshooting	41
Exploded View	44
Parts List	45
Master Parts Distributor List	46
How To Order Repair Parts	46
For The Homeowner	**47**
Important Information	48
Removing & Replacing the Glass Front	49
Decorative Glass & Rock Placement	50
Lighting Instructions	51
Operating Instructions	52
• LED & Fireplace Wall Controls	52
• Using the Remote Control	53
Warranty	58

BEFORE YOU START

UNPACKING THE FIREPLACE

1. Remove the four screws securing the plywood top to the corner supports. Remove the plywood top and discard.
2. Remove the two screws securing each corner support to the pallet. Remove the corner supports and discard.
3. Cut the banding securing the fireplace to the pallet. Discard the banding.

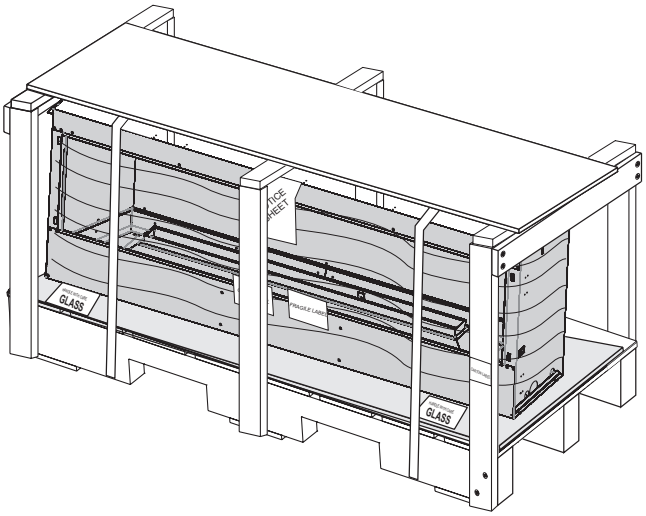

Figure 1

4. Remove the plastic wrap securing the instruction packet and the hardware box to the fireplace.

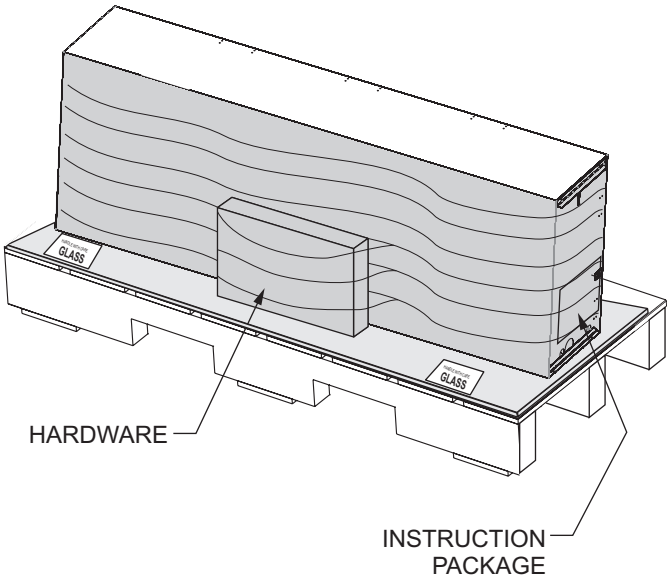

Figure 2

5. Carefully remove the bundle from inside the fireplace. This bundle contains two center glass supports and the burner deflector glass. Put the bundle in an out of the way place to avoid damaging the components.
6. Lift the fireplace off the pallet and place it near the installation site. If the fireplace must be placed on end so that a hand truck may be used for transportation, remove all loose components from inside the fireplace. Truck from the left end (when facing the fireplace opening) only.
7. Remove the top cardboard bundle and the non-combustible board from the pallet.
8. Carefully open the cardboard bundle remaining on the pallet. This bundle contains the optional inner top deflector and the front glass barrier. Put the components in an out of the way place to avoid damaging them.

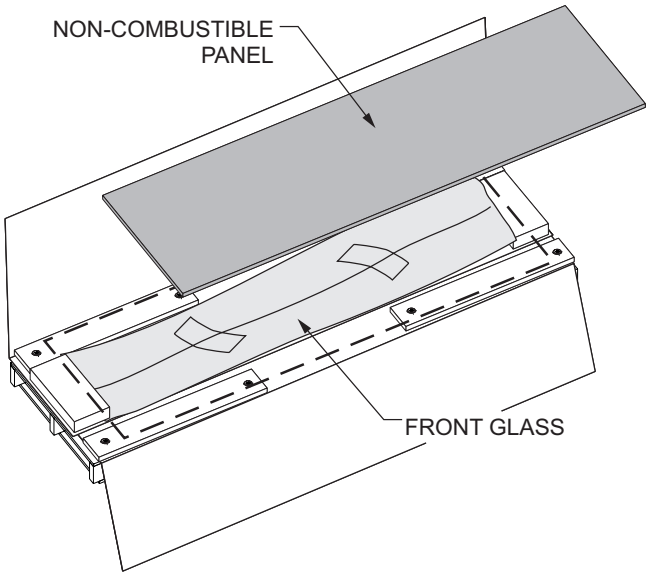

Figure 3

NOTICE: Non-combustible board is required for installation above the fireplace as specified in the installation instructions.

BEFORE YOU START

SAMPLE WARNINGS AND DEFINITIONS:

⚠ DANGER
Indicates a hazardous situation which, if not avoided, will result in death or serious injury.

⚠ WARNING
Indicates a hazardous situation which, if not avoided, could result in death or serious injury.

⚠ CAUTION
Indicates a hazardous situation which, if not avoided, could result in minor or moderate injury.

NOTICE: Addresses practices not related to personal injury.

INSTALLATION INFORMATION

1. Read the soot prevention information on page 7.
2. Read the safety information on pages 12 - 13.
3. Frame the opening. See page 17 and 26.
4. Install the gas lines. See page 18.
5. Install the wiring. See pages 31 - 32.
6. Install the remote system. See page 37.
7. Light the fireplace and troubleshoot. See pages 35 and 41 - 43.
8 For detailed instructions on operating the Proflame - IP Control System see pages 53 - 57.
9. For detailed instructions for the LED Controls, see page 52.
10. Show the homeowner how to operate the fireplace, see page 51 - 57.
11. Show the homeowner how to do the basic maintenance. (See page 39)

INSTALLATION CONSIDERATIONS - FIREPLACE INSTALLATION GUIDELINES

Determine where to install the fireplace. The fireplace can be mounted on any of these surfaces:

1. A flat hard combustible or non-combustible surface.
2. A raised platform of combustible or non-combustible material.

If the fireplace is installed directly on carpeting, tile or other combustible material other than wood flooring, it must be installed on a metal or wood panel extending the full width and depth of the fireplace.

This fireplace is designed to be installed in a zero-clearance enclosure. This means combustible material such as framing lumber can come in contact with the top and side standoff spacers, and secured to combustible framing using the framing brackets provided.

An optional inner top deflector is included with the fireplace. This can be used to help distribute the heat of the fireplace more evenly across the fireplace opening. This does not change the requirements for non-combustible material above the fireplace opening.

This fireplace requires an easily accessible gas shutoff valve be installed in the gas supply line prior to its entry to the fireplace.

Determine the following before installation:

- Any desired accessories
- Gas supply piping (left side entrance).
- Electrical connections
- Electrical supply requirements for lights. (120V, 60Hz, 1 Amp) (left side entrance)

A selection of a shutoff valve containing a flange and key is recommended.

FINISHING OPTIONS

Choose the finishing option.

Option 1 - Clean Face: This type of installation (page 22) will allow for finishing around the fireplace opening with high temperature paint.

Option 2 - Flush Mount: This type of installation will allow you to apply tile, marble, stone or other non-combustible material over the face of the fireplace cabinet, up to the fireplace opening flange.

CARTON CONTENTS

CARTON CONTENTS

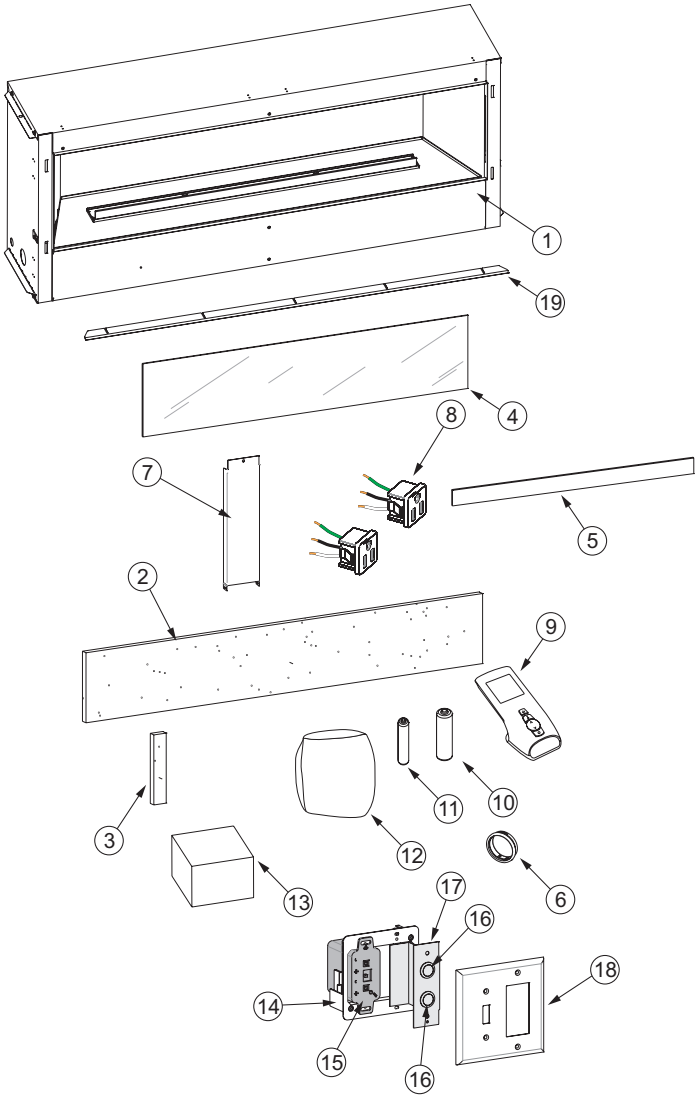

Items not shown to scale.

Index Number	Description	Quantity Supplied
1	Fireplace	1
2	Non-combustible Board - Top	1
3	Non-combustible Board - Side	2
4	Front Glass	1
5	Burner Glass	1
6	Bushing	3
7	Standoff Bracket	3
8	Receptical	2
9	Remote	1
10	AA Battery	4
11	AAA Battery	3
12	Hardware Pack	1
13	AC Adaptor	1
14	Wall Mounted Control Box	1
15	Remote Receiver	1
16	Button Switch	2
17	Mounting Bracket	1
18	Wall Plate	1
19	Inner Top Deflector (Optional Installation)	1

For hardware pack contents, see page 6.

See Parts Lists on pages 46 - 47 for ordering replacement parts. Do not order batteries, bolts, screws, washers or nuts. They are standard hardware items and can be purchased at any local hardware store.

HARDWARE PACK

HARDWARE PACK CONTENTS

#4 X ½” STAINLESS PHILLIPS HEAD SCREW

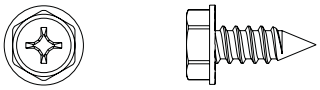

#10 X ½” HEX HEAD SCREW

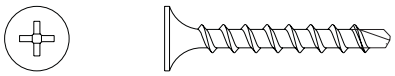

1” PHILLIPS SELF-DRILLING SCREW

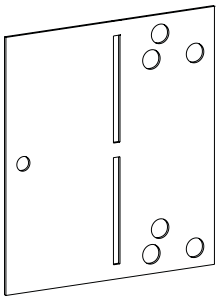

NAILING FLANGES
(Not to scale)

Description	Quantity Supplied
4 x 1/2 Phillips Pan Head Screw	4
10 X 1/2 Phillips Hex Head Screw	14
#8 x 1 inch Self-Drilling Drywall Screw	9
Nailing Flange	4

See Parts Lists on page 46 - 47 for ordering replacement parts. Do not order batteries, bolts, screws, washers or nuts. They are standard hardware items and can be purchased at any local hardware store.

IMPORTANT SOOT PREVENTION STEPS

IMPORTANT NOTICE

INSTALLER - SERVICE PERSON - HOMEOWNER

SOOT MAY BE CREATED IF THE FOLLOWING DIRECTIONS ARE NOT FOLLOWED.

A vent-free fireplace or burner draws room air to support combustion. Lightweight particles suspended in the air – including dust, carpet fibers, candle or tobacco smoke, and pet hair – will be drawn toward the fireplace. These can lead to soot build up on logs, fireplace walls, and even walls of the room. To prevent malfunctions and sooting, have your dealer perform an inspection and cleaning each year – before the heating season. If you have pets or excessive dust, more frequent cleaning may be necessary. See cleaning and service section in this manual.

1. Ensure the air shutter is set to the specification. **See Figures 4 to 6** on this page and Tables 1 and 2 on page 8.
2. Ensure burner, venturi, and air shutter are free of dirt, lint, animal hair (i.e. cat and dog) or anything that may block the needed air flow. See Cleaning and Service, page 40.
3. Do not place debris, additional logs or other articles on the burner during operation.
4. Do not use scented air fresheners or candles while the fireplace is in operation. They produce residue which may cause soot.
6. Do not place glass media on burner or burner ports. The glass media should only be placed on the fireplace floor.
7. Do not use rock wool (embers) or lava rock.
8. Avoid the use of decorative or scented candles while the fireplace is in operation. Soot may be produced from the by-products of a burning candle. Some candles also produce soot.
9. Annual inspection and cleaning by your dealer or a qualified service technician is recommended to prevent malfunction and/or sooting.
10. Install optional logs according to the installation instructions. Only use Empire Logs specially made for this fireplace.
11. Verify the venturi tube is not bent or distorted. The main burner orifice must be centered in the venturi tube for proper combustion and to prevent sooting.

⚠ WARNING

Do not allow fans to blow directly into or at the fireplace. Avoid any drafts that alter burner flame patterns. Avoid any drafts that alter burner flame patterns. Pay particular attention to ceiling fans and exhaust fans.

Verify the air shutter for the correct setting. Refer to Tables 1 and 2 on page 8 for specific air shutter settings for each model.

LP Gas Models - The air shutter setting must be 1/4-inch. **See Figures 4, 5, and Table 1 on Page 8.**

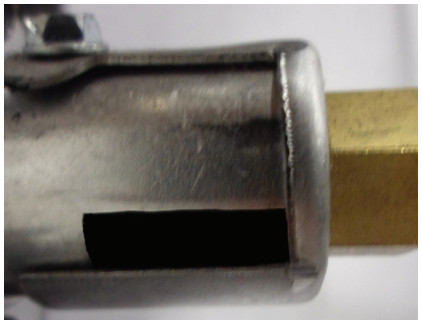

Figure 4 (1/4-inch opening shown)

Test air shutter setting with a round object like a drill bit. The object should barely slide between the opening. **See Figure 5.**

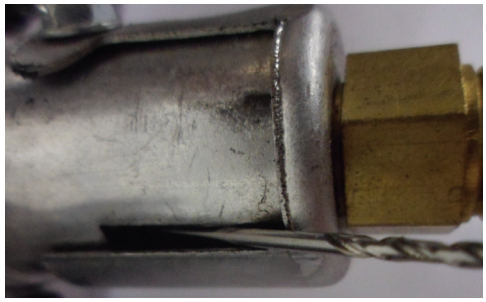

Figure 5 (1/16-inch opening shown)

NAT Gas Models- The air shutter setting must be 1/16 inch. **(See Figure 6 and Table 2 on Page 8)**

Figure 6 (1/16-inch opening shown)

NOTICE: Orifice shield removed for clarity.

PRODUCT SPECIFICATIONS

	VFLL60FP90LP	VFLL60FP90LN	VFLL72FP90LP	VFLL72FP90LN
Input BTU/HR Maximum	38,500	40,000	38,500	40,000
Input BTU/HR Minimum	31,000	25,000	31,000	25,000
Orifice	1.8mm	#32	1.8mm	#32

Notice: Air shutter settings are factory set and muay not be altered.

GAS SUPPLY PRESSURES (inches water column)			
GAS TYPE	MAXIMUM	MINIMUM	MANIFOLD
NAT	10.5	7.0	3.5
LP	13.0	11.0	10.0

Table 1 - Air Shutter Opening - Natural Gas Models	
Model	Air Shutter Opening
VFLL60FP90	1/16 inch
VFLL72FP90	1/16 inch

Table 2 - Air Shutter Opening - LP Gas Models	
Model	Air Shutter Opening
VFLL60FP90	1/4 inch
VFLL72FP90	1/4 inch

HOMEOWNER REFERENCE INFORMATION

We recommend that you record the following information about your fireplace.

Model Number: _____ Date purchased: _____

Serial Number: _____ Location of fireplace: _____

Dealer Name: _____ Dealer Phone: _____

Notes: _____

ACCESSORIES

REQUIRED ACCESSORIES

Part Number		Description
VFLL60	VFLL72	
DG1CLF	DG1CLF	Decorative Glass, Crushed - 1/4 inch Clear Frost (One kit per one square foot) Recommended
DG1BKP	DG1BKP	Decorative Glass, Crushed - 1/4 inch Black Polished (One kit per one square foot)
DG1BUC	DG1BUC	Decorative Glass, Crushed - 1/4 inch Blue Clear (One kit per one square foot)
DG1BCR	DG1BCR	Decorative Glass, Crushed - 1/4 inch Copper Reflective (One kit per one square foot)
DG1BZR	DG1BZR	Decorative Glass, Crushed - 1/4 inch Bronze Reflective (One kit per one square foot)

NOTICE: Decorative crushed glass is required for installation. Clear Frost Crushed Glass is recommended. Decorative Glass Droplets cannot be substituted for crushed glass. One box of crushed glass covers 1 sq. ft. Glass colors may be mixed, however transparent and translucent crushed glass will allow LEDs to better shine through.

NOTICE: Requires five square feet for VFLL60, six square feet for VFLL72.
NOTICE: Never place media material on or next to the burner.

OPTIONAL ACCESSORIES

Part Number		Description
VFLL60	VFLL72	
DFL601BL	DFL721BL	Decorative Front, Beveled, 1-inch, Black
DFL602BL	DFL722BL	Decorative Front, Beveled, 2-inch, Black
VBP60LKR	VBP72LKR	Liner - Black Reflective
VBP60LSS	VBP72LSS	Liner - Stainless Steel
LS60DF	LS72DF	Log Set
DG1AB	DG1AB	Decorative Glass Droplets - 1/2 inch Aqua Blue (One kit per one square foot)
DG1GC	DG1GC	Decorative Glass Droplets - 1/2 inch Glacier Ice (One kit per one square foot)
DG1SL	DG1SL	Decorative Glass Droplets - 1/2 inch Sangria Luster (One kit per one square foot)
DG1NXS	DG1NXS	Decorative Glass Drops - 1 inch Onyx Solid (One kit per one square foot)
DG1TZC	DG1TZC	Decorative Glass Drop - 1 inch Topaz Clear (One kit per one square foot)
DRFPA	DRFPA	Decorative Rock, Ceramic Fiber - Pebble (One kit per 1/2 square foot)

NOTICE: If installing a decorative front, an offset between the finishing materials and fireplace opening is required. Refer to page 25 and 29 as well as the installation instructions provided with the decorative front for more information.

INTRODUCTION

Instructions to Installer

1. Leave instruction manual with owner after installation.
2. Have owner fill out and mail Product Registration Card supplied with unvented fireplace.
3. Fill out Homeowner Reference Information on page 8.
4. Show homeowner how to start and operate unvented fireplace.
5. Show homeowner basic maintenance.

Always consult your local Building Department regarding regulations, codes or ordinances which apply to the installation of an unvented fireplace.

This fireplace may be installed in an aftermarket* manufactured (mobile) home, where not prohibited by state or local codes.

*Aftermarket: Completion of sale, not for purpose of resale, from the manufacturer.

Well Head Gas Installations

Some natural gas utilities use “well head” gas. This may affect the Btu output of the unit and promote sooting. Units shall not be converted to use well head gas.

This appliance is only for use with the type of gas indicated on the rating plate. This appliance is not convertible for use with other gases.

⚠ WARNING

Any change to this fireplace or its controls can be dangerous. Improper installation or use of the fireplace can cause serious injury or death from fire, burns, explosion or carbon monoxide poisoning.

This fireplace is intended for supplemental heating.

Any alteration of the original design, installed other than as shown in these instructions or use with a type of gas not shown on the rating plate is the responsibility of the person and company making the change.

Important

All correspondence should refer to complete Model Number, Serial Number and type of gas. (See page 8)

⚠ WARNING

This appliance is equipped for natural or propane gas. Field conversion is not permitted.

During manufacture, this fireplace is treated with oils, films and bonding agents. These are not harmful but may produce smoke and odor as they burn off during initial operation. This is normal. Open window to vent any smoke or odor.

Installation on Rugs and Tile

If this fireplace is installed directly on carpeting, tile or other combustible material other than wood flooring the fireplace shall be installed on a metal or wood panel extending the full width and depth of the fireplace.

Qualified Installing Agency

Installation and replacement of gas piping, gas utilization equipment or accessories and repair and servicing of equipment shall be performed only by a qualified agency. The term qualified agency means any individual, firm, corporation or company which either in person or through a representative is engaged in and is responsible for (a) the installation or replacement of gas piping or (b) the connection, installation, repair or servicing of equipment, who is experienced in such work, familiar with all precautions required and has complied with all the requirements of the authority having jurisdiction.

Commonwealth of Massachusetts: The installation must be made by a licensed plumber or gas fitter in the Commonwealth of Massachusetts.

Sellers of unvented propane or natural gas-fired supplemental fireplaces shall provide to each purchaser a copy of 527 CMR 30 upon sale of the unit.

In the Commonwealth of Massachusetts, unvented propane and natural gas-fired space heaters shall be prohibited in bedrooms and bathrooms.

The installation must conform with local codes or, in the absence of local codes, with the National Fuel Gas Code, ANSI Z223.1.*/ NFPA 54.

*Available from the American National Standards Institute, Inc. 1430 Broadway, New York, N.Y. 10018.

IMPORTANT INFORMATION

⚠ WARNING

Failure to keep the primary air opening(s) of the burner(s) clean may result in sooting and property damage.

For the Installer

- Installation and repair should be done by a qualified service person. The fireplace should be inspected before use and at least annually by a qualified service person. More frequent cleaning might be required due to excessive lint from carpeting, bedding material, etc. It is imperative that control compartments, burners and circulating air passageways of the fireplace be kept clean. Keep burner and control compartment clean.
- An unvented room fireplace having an input rating of more than 6,000 Btu per hour shall not be installed in a bathroom
- An unvented room fireplace having an input rating of more than 10,000 Btu per hour shall not be installed in a bedroom or bathroom.
- Use Non-Combustible Materials where indicated for the fireplace installation. Non-combustible material do not ignite or burn as a result of using the fireplace. These include metal, brick, ceramic, concrete, slate, glass, and plaster. Adhesives must be rated for high temperatures. Any mechanical fasteners used to install material must also be non-combustible, including wall anchors and tile spacers. Materials that pass the ASTM E 136 test (Standard Test Method for Behavior of Materials in a Vertical Tube Furnace at 750C) are considered non-combustible.
- Install the fireplace out of household traffic and away from furniture and draperies. The high temperatures produced by the fireplace create an ignition risk.

For the Homeowner

- Do not allow Combustible Materials adjacent to or in contact with the fireplace. Combustible materials include wood, compressed paper, plant fibers, or other materials that will burn. These materials are considered combustible even when treated with fire-retardant chemicals.
- Alert children and adults to the hazards of high surface temperatures. Warn them to stay away to avoid burns and clothing ignition.
- Supervise children when they are in the same room as the fireplace.
- Do not place clothing or other flammable material on or near the fireplace.
- Any safety screen or guard removed for servicing the fireplace must be replaced prior to operating the fireplace.
- Keep fireplace area clear and free from combustible materials, gasoline and other flammable vapors and liquids.
- Do not use this fireplace if any part has been under water. Immediately call a qualified service technician to inspect the fireplace and to replace any part of the control system and any gas control which has been under water.
- Operate fireplace with all glass panels in place.
- Do not place embers (rock wool) in this fireplace.
- Do not place lava rocks in this fireplace.

IMPORTANT SAFETY INFORMATION

⚠ WARNING

When used without adequate combustion and ventilation air, appliance may give off CARBON MONOXIDE, an odorless, poisonous gas.

Do not install appliance until all necessary provisions are made for combustion and ventilation air. Consult the written instructions provided with the appliance for information concerning combustion and ventilation air. In the absence of instructions, refer to the National Fuel Gas Code, ANSI Z223.1/NFPA 54, Air for Combustion and Ventilation, or applicable local codes.

This appliance is equipped with a PILOT LIGHT SAFETY SYSTEM designed to turn off the appliance if not enough fresh air is available.

The pilot light safety system senses the depletion of oxygen at its location. If this fireplace is installed in a structure having a high vertical dimension, the possibility exists that the oxygen supply at the higher levels will be less than that at the fireplace. In this type of application, a fan to circulate the structure air will minimize this effect. The use of this fan will also improve the comfort level in the structure. When a fan is used to circulate air, it should be located so that the air flow is not directed at the burner.

DO NOT TAMPER WITH PILOT LIGHT SAFETY SYSTEM!

If fireplace shuts off, do not relight until you provide fresh air.

If fireplace keeps shutting off, have it serviced. Keep burner and control compartment clean. See installation and operating instructions accompanying heater.

⚠ WARNING

CARBON MONOXIDE POISONING MAY LEAD TO DEATH.

Early signs of carbon monoxide poisoning resemble the flu, with headache, dizziness and/or nausea. If you have these signs, fireplace may not be working properly. Get fresh air at once! Have fireplace serviced.

Some people — pregnant women, persons with heart or lung disease, anemia, those under the influence of alcohol , those at high altitudes — are more affected by carbon monoxide than others.

⚠ DANGER

The installer of this product is responsible for the verifying the correct position of the air shutter and adjusting it if required. If not adjusted to the proper opening, a fire, explosion, or production of carbon monoxide may result causing property damage, personal injury or loss of life.

⚠ DANGER

The installer of this product is responsible for testing all connections for gas leaks. A gas leak will create a situation where a fire, explosion, or production of carbon monoxide may result causing property damage, personal injury or loss of life.

⚠ WARNING

Do not use a blower insert, heat exchanger insert or other accessory not approved for use with this heater. The use of accessories not tested and approved for use with this fireplace will create a situation where a fire, explosion, or production of carbon monoxide may result causing property damage, personal injury or loss of life.

⚠ WARNING

This fireplace needs fresh air for ventilation to run properly. Inadequate air supply may create a situation where a fire, explosion, or production of carbon monoxide may result causing property damage, personal injury or loss of life. This fireplace has an ODS (oxygen depletion sensor) which will shut down the fireplace if adequate fresh air is not available. See troubleshooting section in the instructions.

⚠ WARNING

Do not operate this fireplace unless all components including burners and controls are in good working condition. Never operate this fireplace if any optional log or twig is broken, or out of their intended position. Refer to the Log set placement instructions for correct log and twig positioning.
Replacement components are available through your local dealer as indicated in the How to Order Repair Parts section of the fireplace manual.

SAFETY INFORMATION FOR USERS OF LP-GAS

Propane (LP-Gas) is a flammable gas which can cause fires and explosions. In its natural state, propane is odorless and colorless. You may not know all the following safety precautions which can protect both you and your family from an accident. Read them carefully now, then review them point by point with the members of your household. Someday when there may not be a minute to lose, everyone's safety will depend on knowing exactly what to do. If, after reading the following information, you feel you still need more information, please contact your gas supplier.

LP-Gas Warning Order

If a gas leak happens, you should be able to smell the gas because of the odorant put in the LP-Gas.
That's your signal to go into immediate action!

- Do not operate electric switches, light matches, or use your phone. Do not do anything that could ignite the gas.
- Get everyone out of the building, vehicle, trailer, or area. Do that IMMEDIATELY.
- Close all gas tank or cylinder supply valves.
- LP-Gas is heavier than air and may settle in low areas such as basements. When you have reason to suspect a gas leak, keep out of basements and other low areas. Stay out until firefighters declare them to be safe.
- Use your neighbor's phone and call a trained LP-Gas service person and the fire department. Even though you may not continue to smell gas, do not turn on the gas again. Do not re-enter the building, vehicle, trailer, or area.
- Finally, let the service man and firefighters check for escaped gas. Have them air out the area before you return. Properly trained LP-Gas service people should repair the leak, then check and relight the gas fireplace for you.

No Odor Detected - Odor Fade

Some people cannot smell well. Some people cannot smell the odor of the chemical put into the gas. You must find out if you can smell the odorant in propane. Smoking can decrease your ability to smell. Being around an odor for a time can affect your sensitivity or ability to detect that odor. Sometimes other odors in the area mask the gas odor. People may not smell the gas odor or their minds are on something else. Thinking about smelling a gas odor can make it easier to smell.

The odorant in LP-Gas is colorless, and it can fade under some circumstances. For example, if there is an underground leak, the movement of the gas through soil can filter the odorant. Odorants in LP-Gas also are subject to oxidation. This fading can occur if there is rust inside the storage tank or in iron gas pipes.

The odorant in escaped gas can adsorb or absorb onto or into walls, masonry and other materials and fabrics in a room. That will take some of the odorant out of the gas, reducing its odor intensity.

LP-Gas may stratify in a closed area, and the odor intensity could vary at different levels. Since it is heavier than air, there may be more odor at lower levels. Always be sensitive to the slightest gas odor. If you detect any odor, treat it as a serious leak. Immediately go into action as instructed earlier.

Some points to remember

- Learn to recognize the odor of LP-Gas. Your local LP-Gas Dealer can give you a Scratch and Sniff pamphlet. Use it to find out what the propane odor smells like. If you suspect that your LP-Gas has a weak or abnormal odor, call your LP-Gas Dealer.
- If you are not qualified, do not light pilot lights, perform service, or make adjustments to fireplaces on the LP-Gas system. If you are qualified, consciously think about the odor of LP-Gas prior to and while lighting pilot lights or performing service or making adjustments.
- Sometimes a basement or a closed-up house has a musty smell that can cover up the LP-Gas odor. Do not try to light pilot lights, perform service, or make adjustments in an area where the conditions are such that you may not detect the odor if there has been a leak of LP-Gas.
- Odor fade, due to oxidation by rust or adsorption on walls of new cylinders and tanks, is possible. Therefore, people should be particularly alert and careful when new tanks or cylinders are placed in service. Odor fade can occur in new tanks, or reinstalled old tanks, if they are filled and allowed to set too long before refilling. Cylinders and tanks which have been out of service for a time may develop internal rust which will cause odor fade. If such conditions are suspected to exist, a periodic sniff test of the gas is advisable. If you have any question about the gas odor, call your LP-Gas dealer. A periodic sniff test of the LP-Gas is a good safety measure under any condition.
- If, at any time, you do not smell the LP-Gas odorant and you think you should, assume you have a leak. Then take the same immediate action recommended above for the occasion when you do detect the odorized LP-Gas.
- If you experience a complete gas out, (the container is under no vapor pressure), turn the tank valve off immediately. If the container valve is left on, the container may draw in some air through openings such as pilot light orifices. If this occurs, some new internal rusting could occur. If the valve is left open, then treat the container as a new tank. Always be sure your container is under vapor pressure by turning it off at the container before it goes completely empty or having it refilled before it is completely empty.

IMPORTANT INSTALLATION GUIDELINES

Proper Primary Airflow into Burner
For proper burner operation and flame appearance, the flow of primary air into the venturi tube, located at the gas inlet of the burner, must not be reduced. This flow of air is reduced if dirt, lint or other obstructions build-up around or inside the venturi. Any obstruction in the venturi tube area must be removed. The flow of air into the venturi is also reduced if the gas orifice isn't centered in the venturi inlet and/or is not aligned with the venturi. Any misalignment of the burner orifice may be corrected by bending the shutter cap holding the orifice to the inlet of the venturi tube.

Ceiling Fans, Portable Fans or Logs Installed Near Cold Air Returns
Ceiling fans or oscillating floor type fans need to be monitored during the operation of a vent-free fireplace. If the air blows directly into the flame causing it to disrupt the flame, it should be turned off or redirected. Ceiling fans could be reversed to possibly eliminate flame impingement, and the floor fan should be redirected. Upon installation, be aware of any cold air returns or vents in the proximity of the fireplace. Any draft created around a vent-free fireplace can cause the flame to impinge on the logs or decorative media and create a sooting situation.

Television Considerations
Installing a television above a fireplace has become increasingly popular; however, the area above any fireplace gets hot and most TV manufacturers recommend against placing their products near a heat source.
If you install a television above this fireplace, Empire Comfort Systems accepts no responsibility for damage or injuries. Follow the television manufacturer's installation instructions, including any recommendations regarding proximity to heat sources.
If you have a TV above your fireplace, turn off the fireplace and let it cool completely before servicing or touching any buttons on the TV.

WATER VAPOR: A BY-PRODUCT OF UNVENTED ROOM HEATERS

Water vapor is a by-product of gas combustion. An unvented room heater produces approximately one ounce (30ml) of water for every 1,000 BTU (.3KW's) of gas input per hour.

Unvented room heaters are recommended as supplemental heat (a room) rather than a primary heat source (an entire house). In most supplemental heat applications, the water vapor does not create a problem. In most applications, the water vapor enhances the low humidity atmosphere experienced during cold weather.

The following steps will help ensure that water vapor does not become a problem.

1. Be sure the heater is sized properly for the application, including ample combustion air and circulation air.
2. If high humidity is experienced, a dehumidifier will help lower the water vapor content of the air.
3. Do not use an unvented room heater as the primary heat source.

PROVISIONS FOR ADEQUATE COMBUSTION & VENTILATION AIR

This heater shall not be installed in a confined space unless provisions are provided for adequate combustion and ventilation air.

The National Fuel Gas Code defines a confined space as a space whose volume is less than 50 cubic feet per 1,000 Btu per hour (4.8m^3 per kw) of the aggregate input rating of all appliances installed in that space and an unconfined space as a space whose volume is not less than 50 cubic feet per 1,000 Btu per hour (4.8 m^3 per kw) of the aggregate input rating of all appliances installed in that space. Rooms communicating directly with the space in which the appliances are installed, through openings not furnished with doors, are considered a part of the unconfined space.

Unusually Tight Construction

The air that leaks around doors and windows may provide enough fresh air for combustion and ventilation. However, in buildings of unusually tight construction, you must provide additional fresh air.

Unusually tight construction is defined as construction where:

a. Walls and ceilings exposed to the outside atmosphere have a continuous water vapor retarder with a rating of one perm or less with openings gasketed or sealed, and
b. Weatherstripping has been added on openable windows and doors, and
c. Caulking or sealants are applied to areas such as joints around window and door frames, between sole plates and floors, between wall-ceiling joints, between wall panels, at penetrations for plumbing, electrical, and gas lines, and at other openings.

If your home meets all of the three criteria above, you must provide additional fresh air.

⚠ WARNING

If the area in which the heater may be operated is smaller than that defined as an unconfined space or if the building is of unusually tight construction, provide adequate combustion and ventilation air by one of the methods described in the National Fuel Gas Code, ANSI Z223.1/NFPA 54, Air for Combustion and Ventilation, or applicable local codes.

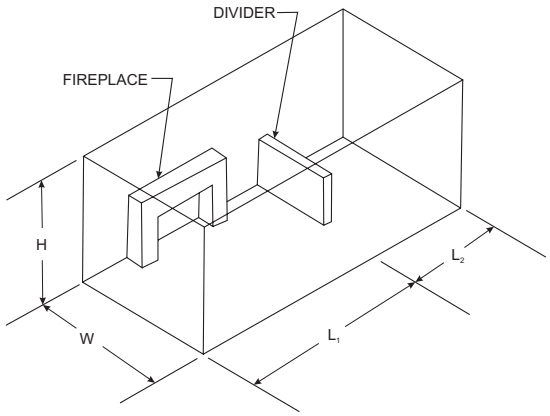

Example of Large Room with 1/2 Wall divider.

Figure 7

The following formula can be used to determine the maximum heater rating per the definition of unconfined space:

$$\text{Btu/Hr} = \frac{(L_1 + L_2)FT \times (W)FT \times (H)FT}{50} \times 1000$$

If the area in which the heater may be operated is smaller than that defined as an unconfined space, provide adequate combustion and ventilation air by one of the methods described in the National Fuel Gas Code, ANSI Z223.1, NFPA54.

Adhere to all codes, or in their absence, the latest edition of THE NATIONAL FUEL GAS CODE ANSI Z223.1/NFPA54 which can be obtained from:

American National Standards Institute
11 West 42nd St.
New York, NY 10018

National Fire Protection Association, Inc.
Batterymarch Park
Quincy, MA 02269

FIREPLACE DIMENSIONS

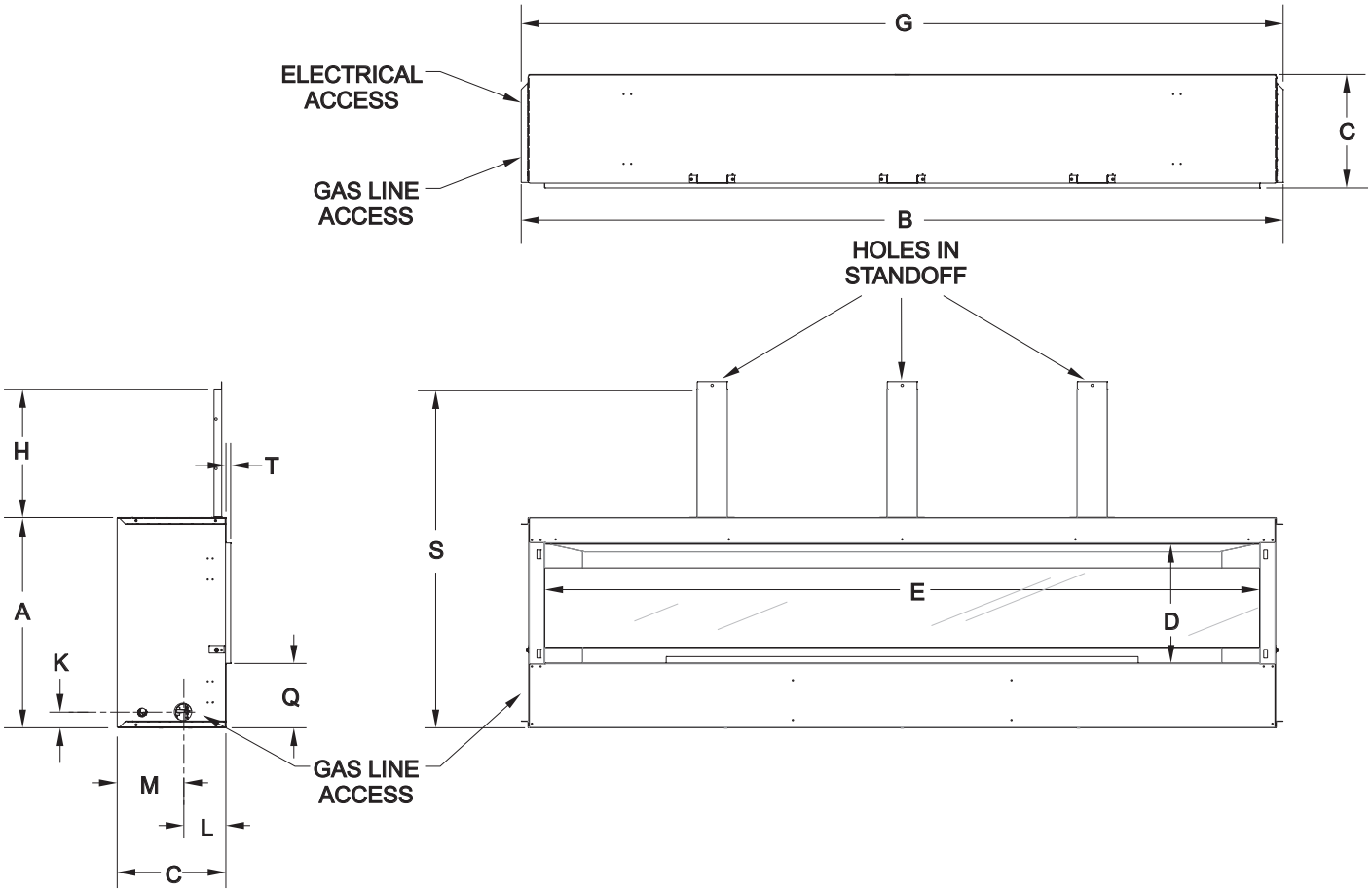

INDEX LETTER	DIMENSION DESCRIPTION	VFLL60FP	VFLL72FP
		Dimensions in Inches	
A	The maximum height of firebox face (excluding standoffs)	22-1/4	22-1/4
B	The maximum width of the firebox face (excluding nailing flanges)	64-3/4	76-3/4
C	The maximum depth of the firebox	11-1/4	11-1/4
D	The height of the firebox opening	12-1/8	12-1/8
E	The width of the firebox opening	60	72
F	The interior depth of the firebox (not shown)	10-1/2	10-1/2
G	The rear exterior width of the firebox (not shown)	64-3/4	76-3/4
H	The height to the firebox standoffs	18-15/16	18-15/16
K	Height from the bottom of the firebox to the gas line opening	1-5/8	1-5/8
L	Depth from the front of the firebox to gas line opening	4-5/16	4-5/16
M	Depth from rear of firebox to gas line opening	6-7/8	6-7/8
N	Glass height (not shown)	8	8
O	Glass width (not shown)	61-3/8	73-3/8
Q	Distance from fireplace bottom to fireplace opening	7-1/2	7-1/2
S	Overall height to header	41-1/8	41-1/8
T	Opening Lip	1/2	1/2

JUNCTION BOX WIRING INSTALLATION

All wiring must be done by a qualified electrician and shall be in compliance with all local, city and state building codes. Before making the electrical connection, make sure the main power supply is disconnected. The fireplace, when installed, must be electrically grounded in accordance with local codes or, in the absence of local codes, with the National Electrical Code ANSI/ NFPA 70 (latest edition).

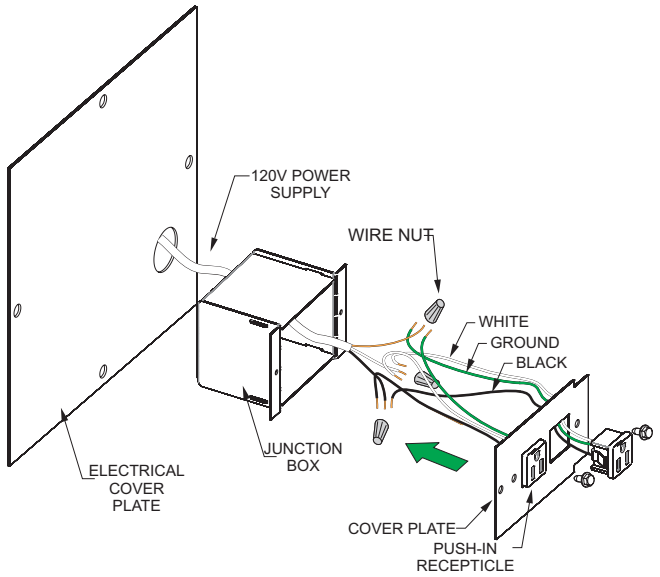

Figure 8

1. Remove the electrical access cover panel from the left end of the fireplace. **See Figure 9.**

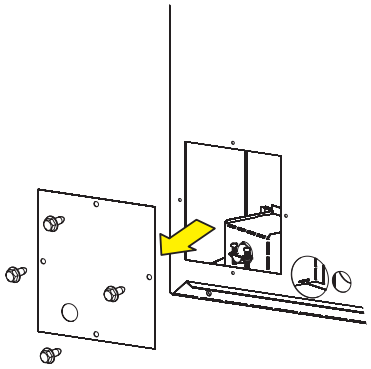

Figure 9

Junction Box Wiring Installation

A factory installed junction box is located at the lower left corner inside the firebox bottom cavity. The suggested 120V electrical requirements include installation of the electrical receptacle into the junction box located at the lower left corner inside the firebox bottom cavity. This will be used to plug in the AC/DC Adapter that provides power to the electronic valve system.
Move the fireplace to its final location or near it before installing electrical wire or connecting gas lines.

2. Remove the junction box assembly from inside of the fireplace. **See Figure 10.**

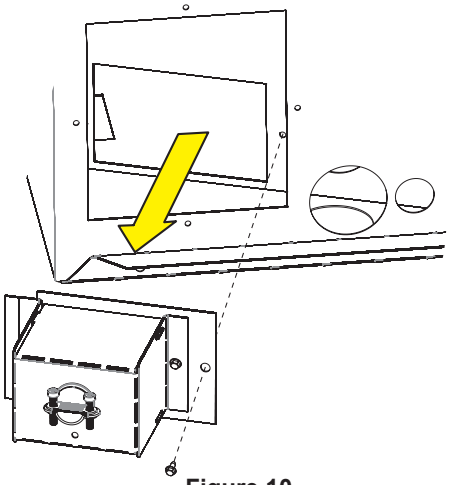

Figure 10

3. Install a plastic bushing into the electrical access panel. **See Figure 11.**

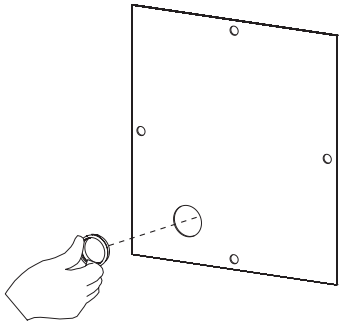

Figure 11

4. Remove the junction box cover. Run 14/2 NM-B with ground or 12/2 NM-B with ground wire through the electrical access panel into the Junction box. Secure wiring with the wire connector as required and install the two receptacles as shown in **Figure 8.** Attach the black wires with a wire nut, and the white wires with a wire nut. Secure the incoming ground wire and green receptacle ground wires under the green ground screw provided in the junction box. Re-install the Junction box cover.
5. Re-install the junction box into the lower left corner of the firebox cavity using the screws removed in step 2. **See Figure 11.**
6. Reinstall the electrical access panel with the screws removed in step 1. **See Figure 9.**

GAS SUPPLY

The gas pipeline can be brought in through the left side of the fireplace. The fireplace has a Flexline located on the left side when facing the fireplace. See Figures 12 and 13. Consult the current National Fuel Gas Code, ANSI Z223.1 CAN/CGA-B149 (.1 or .2) installation code.

Recommended Gas Pipe Diameter				
Pipe Length (Dimensions in feet)	Schedule 40 Pipe Inside Diameter		Tubing, Type L Outside Diameter	
	(Dimensions in Inches)			
	Nat.	L.P.	Nat.	L.P.
0-10	1/2	3/8	1/2	3/8
11-40	1/2	1/2	5/8	1/2
41-100	1/2	1/2	3/4	1/2
101-150	3/4	1/2	7/8	3/4

***Caution*:** Never use plastic pipe. Check to confirm whether your local codes allow copper or galvanized tubing.

***NOTICE*:** Since some municipalities have additional local codes, it is always best to consult your local authority and installation code.

The use of the following gas connectors is recommended:

— ANSI Z21.24 Fireplace Connectors of Corrugated Metal Tubing and Fittings.

— ANSI Z21.45 Assembled Flexible Fireplace Connectors of Other Than All-Metal Construction

The above connectors may be used if acceptable by the authority having jurisdiction. The state of Massachusetts requires that a flexible fireplace connector cannot exceed three feet in length.

FLEXIBLE GAS LINE CONNECTION

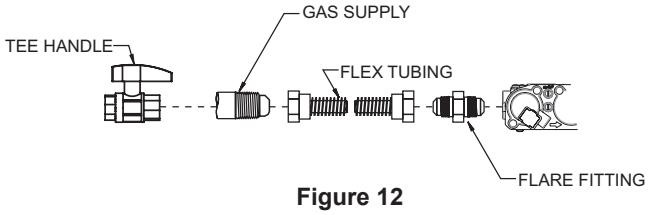

Figure 12

Installing the Main Gas Shut-Off

Each fireplace should have its own manual gas shut-off.

A manual main gas shut-off should be located in the vicinity of the fireplace and can be easily accessed after assembly. Where none exists, or where its size or location is not adequate, contact your local authorized installer for installation or relocation.

Compounds used on threaded joints of gas piping shall be resistant to the action of liquefied petroleum gases. The gas lines must be checked for leaks by the installer. Testing for leaks on all exposed connections should be done with leak test solution or a soap solution. After testing is complete, all solution should be cleaned off. On unexposed connections, a pressure test should be made.

Never use an exposed flame to check for leaks. Fireplace must be disconnected from piping at inlet of control valve and pipe capped or plugged for pressure test. Never pressure test with fireplace connected; control valve will sustain damage.

NOTICE: The gas controls are equipped with a captured screw-type pressure test point. It is not necessary to provide a 1/8-inch test point up stream of the control.

When using copper or flex connector use only approved fittings.

The fireplace and its individual shut-off valve must be disconnected from supply piping system during any pressure testing of that system at test pressures in excess of 1/2 psig (3.5kPa).

The fireplace must be isolated from the gas supply piping system by closing its individual manual shut-off valve during any pressure testing of the gas supply piping system at test pressures equal to or less than 1/2 psig (3.5kPa).

⚠ WARNING

If one of the procedures results in pressures in excess of 1/2 psig (14 inches w.c.) (3.5 kPa) on the fireplace gas valve, it will result in a hazardous condition.

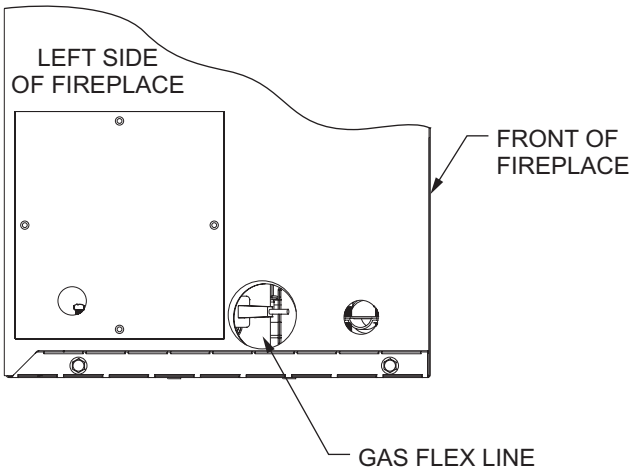

Figure 13

Shut-off valve must be accessible after installation.

A gas valve and ground joint union should be installed in the gas line upstream of the gas control to aid in servicing. The National Fuel Gas Code requires that a drip leg be installed near the gas inlet. **See Figure 14.** This should consist of a vertical length of pipe tee connected into the gas line that is capped on the bottom in which condensation and foreign particles may collect.

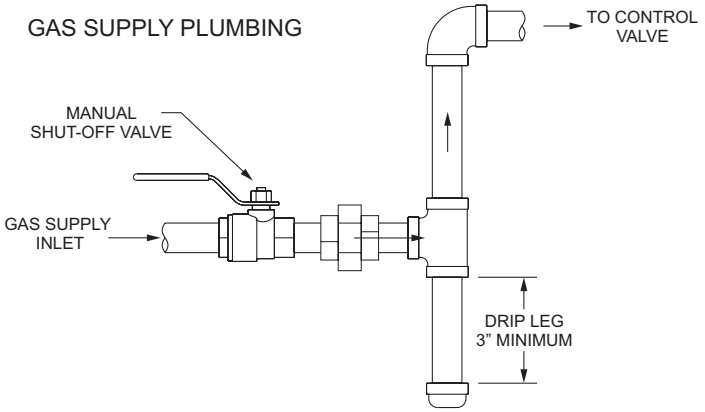

Figure 14

Empire recommends using a flange and key shutoff valve.

CLEARANCES

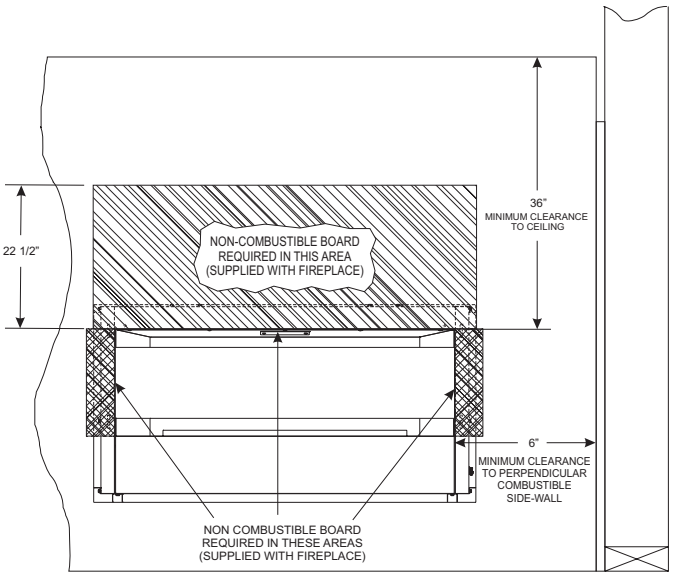

NOTICE: Combustible material is allowed below a fireplace viewing area opening and outside the non-combustible board.

Important! If installing a decorative front, an offset between the finishing materials and fireplace opening is required. Refer to pages 24 and 28 for more information.

Figure 15 - Finishing Option 1

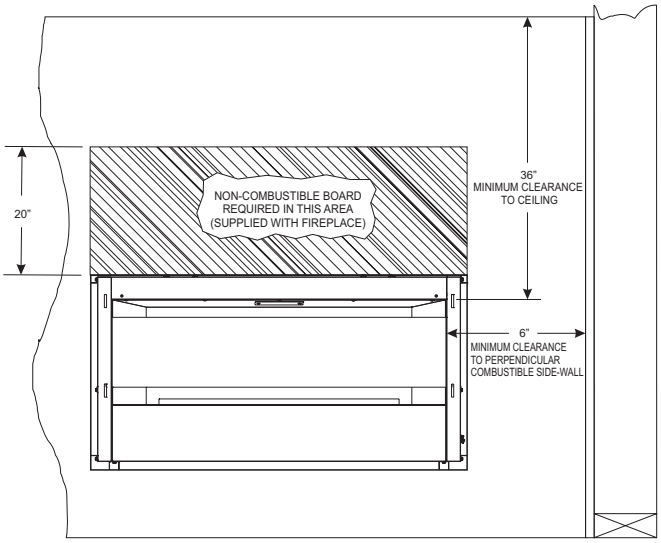

NOTICE: Combustible material is allowed outside of the non-combustible board and outside of the fireplace boundaries. Notice: Non-combustible material provided with the fireplace is larger than required for this installation. Material may be trimmed to the proper size. Wear eye and breathing protection.

Important! If installing a decorative front, an offset between the finishing materials and fireplace opening is required. Refer to pages 24 and 28 for more information.

Figure 16 -Finishing Option 2

⚠ WARNING

Do not put screws through large non-combustible board and into the fireplace. Attach screws only in standoffs.

Mantel Clearances

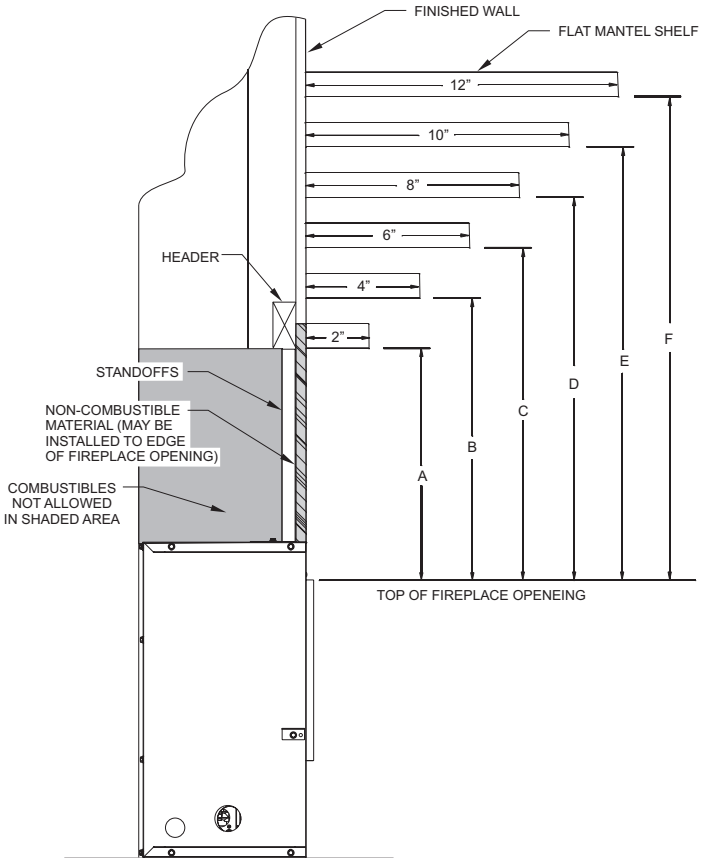

MODEL	Dimensions in Inches					
	A	B	C	D	E	F
VFLL60FP90	26	28	30	32	34	36
VFLL72FP90	26	28	30	32	34	36

Figure 17

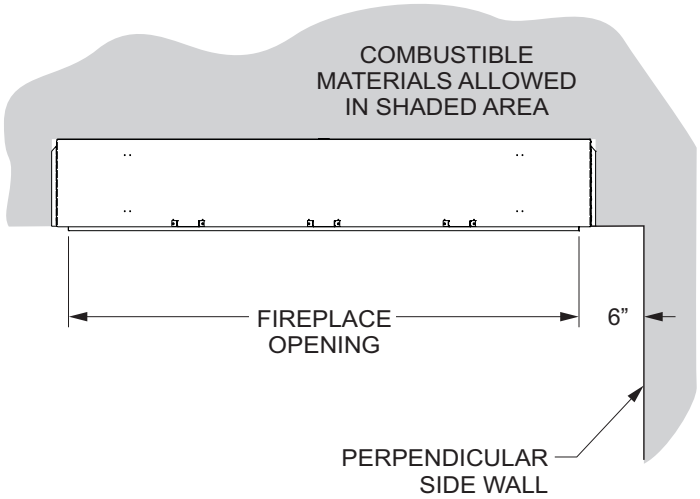

Figure 18

INSTALLATION OPTION 1 - CLEAN FACE

Attention!

The installation steps on pages 21 - 24 are for Installation Option 1 - Clean Face.

See pages 26 - 29 for installing the fireplace for Installation Option 2 - Flush Mount.

This type of installation will allow for finishing around the fireplace face with high temperature paint.

FIREPLACE & NONCOMBUSTIBLE BOARD INSTALLATION - CLEAN FACE

1. Frame in rough opening.
   - This fireplace is designed to be mounted on a hard, flat surface or raised platform.
   - Use dimensions shown in **Figure 19** for a conventional rough opening.
   - Use **Figure 20** for an elevated installation. Provide support to the bottom of the fireplace.
   - Use dimensions shown in **Figure 21** for corner rough opening. Be sure to provide gas line and electrical power for fireplace assembly.
2. Refer to Junction Box Wiring section on page 17 for details on electrical requirements.
3. Verify gas and electrical lines are ready for fireplace installation. See Gas Supply page 18.

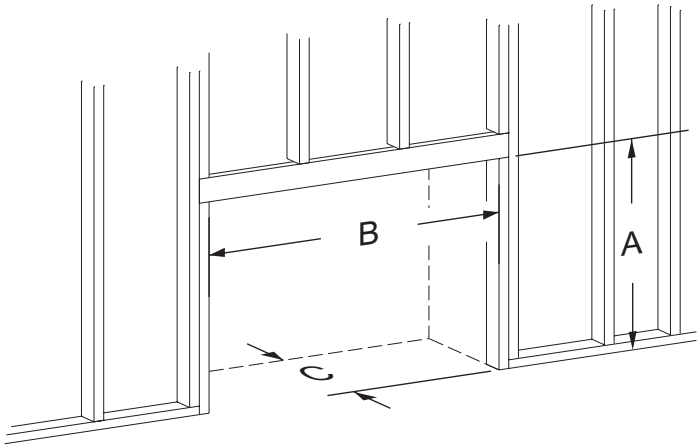

Figure 19 - Rough Opening for Installing in Wall

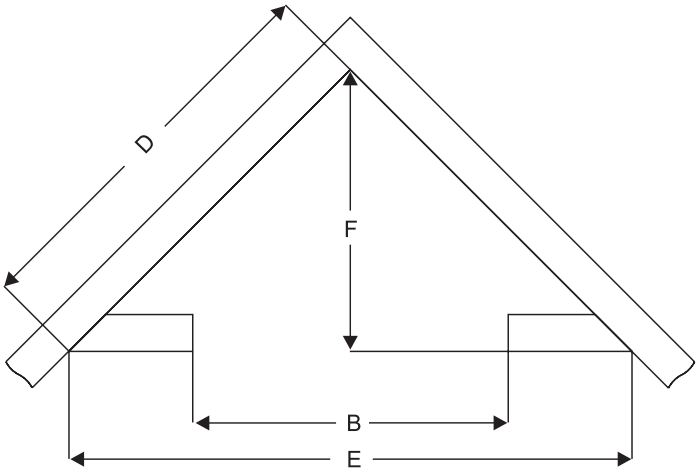

Figure 21 - Rough Opening for Installing in Corner

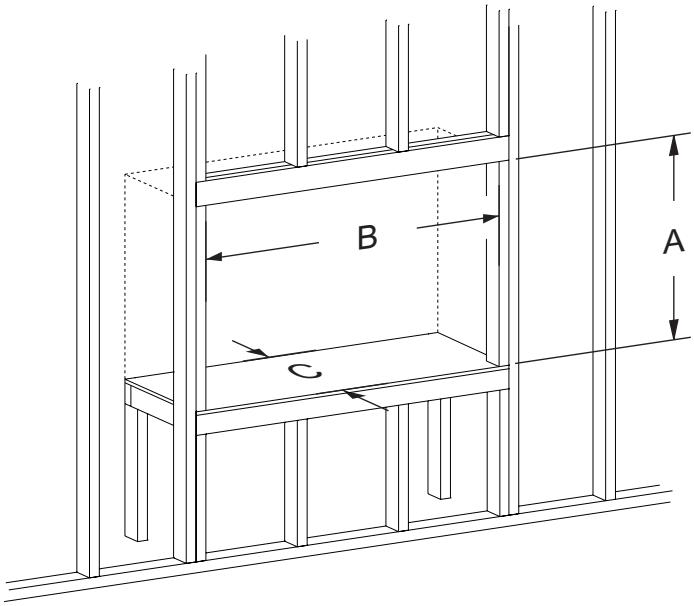

Figure 20 - Rough Opening for Elevated Installation

TABLE 3 - FRAMING DIMENSIONS (in inches) FOR FIGURES 23 - 25						
Model	**A**	**B**	**C**	**D**	**E**	**F**
VFLL60FP	41-1/4	65	11-1/2	62-1/2	88-1/4	44-1/4
VFLL72FP	41-1/4	77	11-1/2	71	100-1/4	50-1/4

* Minimum clearance with 1/2-inch non-combustible board over face of fireplace.

NAILING FLANGES & STANDOFF BRACKETS - CLEAN FACE

NOTICE: You must use the nailing flanges and standoff brackets that are supplied with the fireplace. The brackets are shipped inside the hardware box behind the fireplace.

1. Locate the three steel standoff brackets inside the hardware box. **See Figure 22.**

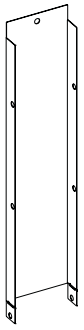

Figure 22

2. The brackets have a perforation located at the bottom of each side. Bend them at the perforation. **See Figure 23.**

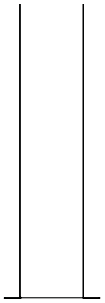

Figure 23

3. Secure the brackets to the fireplace top with six screws as shown in **Figure 24.** The screws are located in the hardware packet inside the envelope pack. There are holes located in the top of the fireplace for each standoff bracket. The hole closer to the front edge of the fireplace is for mounting noncombustible board around the opening (Finishing Option 1). The other hole is for mounting the non-combustible board flush to the fireplace face (top, side and bottom) (Finishing Option 2). **See Figures 24 to 27.**

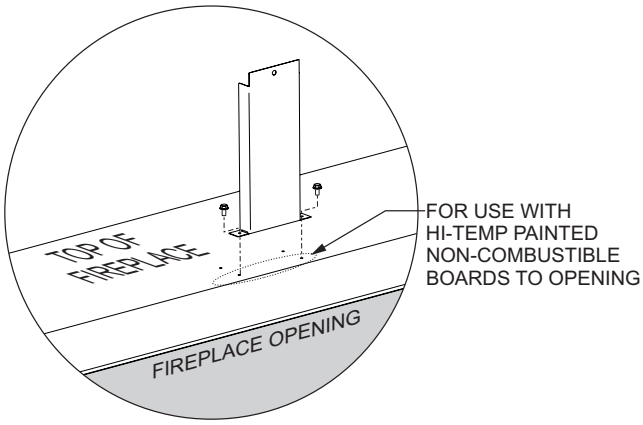

Figure 24

4. On the top and bottom of each side are side standoffs. Use pliers to bend each side standoff 90 degrees away from the cabinet. **See Figure 26.**

5. Locate nailing flanges in the envelope pack. The holes in the nailing flanges allow for different size boards and locations for the wall boards. **See Figure 25.** Bend the brackets at 90° angles. Install four nailing flanges with two 10 x 1/2 screws (each). **See Figures 26 and 27.** The hole closer to the front edge of the fireplace is for Installation Option 1. The other hole is for Installation Option 2. Notice: The non-combustible board provided is 1/2-inch thick.

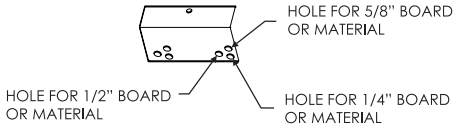

Figure 25

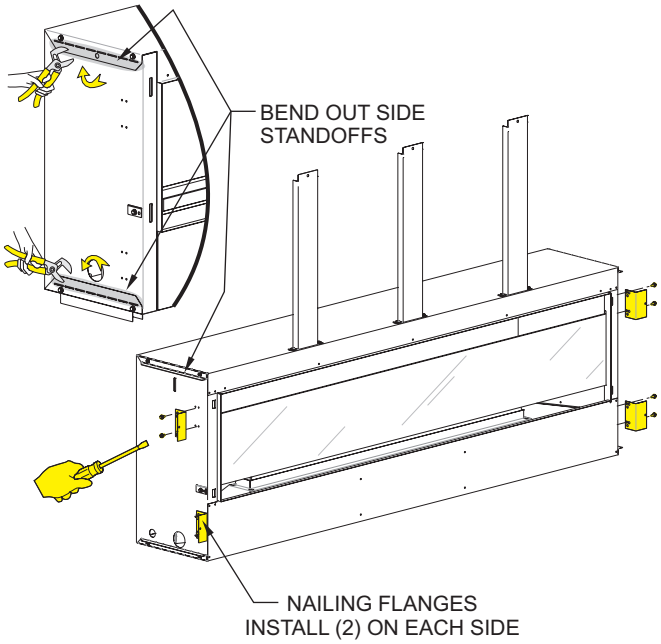

Figure 26

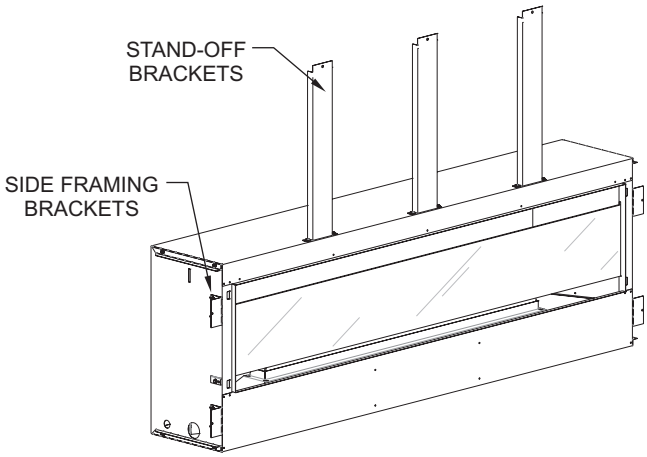

Figure 27

FIREPLACE & NONCOMBUSTIBLE BOARD INSTALLATION - CLEAN FACE

1. Insert fireplace into enclosure.
2. Level fireplace.
3. Secure three standoff brackets with drywall screws to the framed opening above the fireplace as shown in **Figure 28.** ***NOTICE:*** The drywall screws are located in the instruction envelope packet. Secure fireplace on left and right through side nailing flanges.
4. Install the fireplace so that non-combustible board is installed over the fireplace cabinet face, secure the top and side nailing flanges flush with the face of the fireplace cabinet.

NOTICE: Installation of a decorative front is recommended to provide the cleanest finished look.

5. Check gas lines for leaks.
6. Plug AC adapter and LED transformer to junction box.
7. Install the wall-mounted control box within 10 feet of the center of the fireplace. **See Figure 28.**

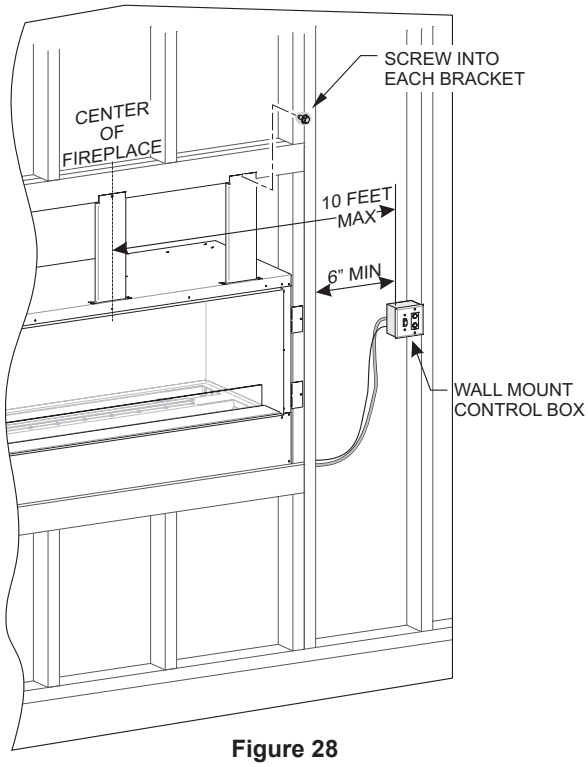

Figure 28

8. Install a plastic bushing in both the liner and outer walls of the fireplace. **See Figures 29 & 30.**

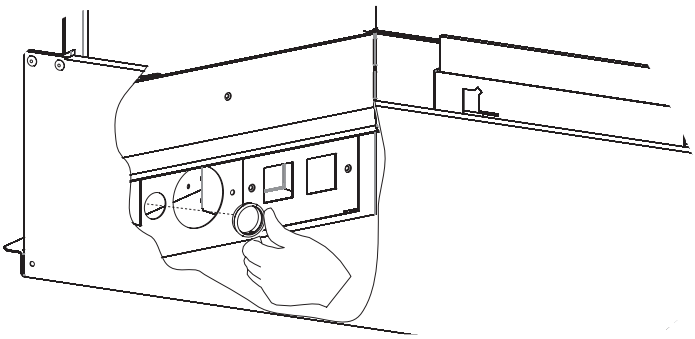

Figure 29

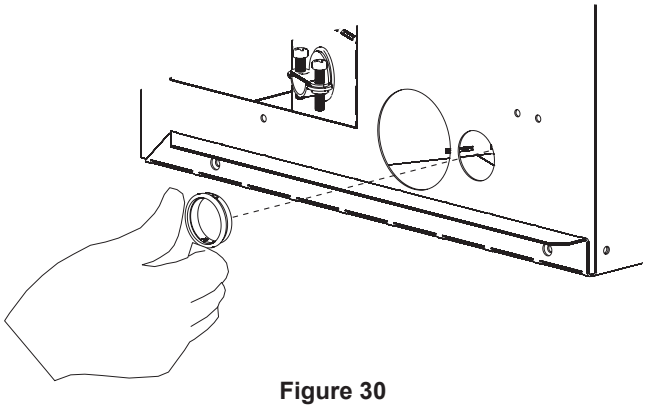

Figure 30

9. Route the yellow LED wire harness, grey remote receiver harness,and red/black battery backup harness through the bushings to the wall. Mount controls and connect. **See Figure 31.**

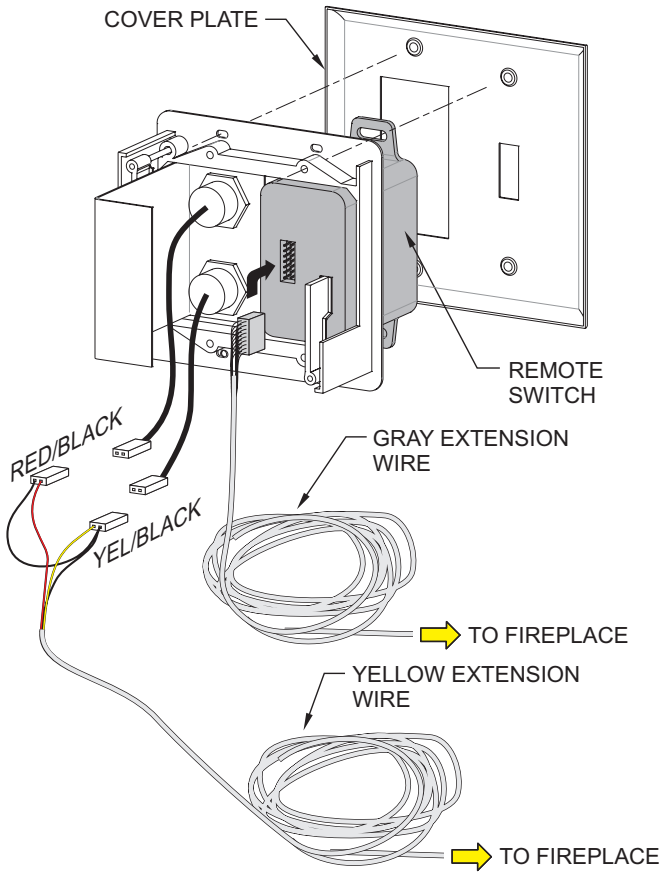

Figure 31

10. Set receiver in wall box to remote. Set switch on side of heat shield to standing pilot or intermediate pilot.

FIREPLACE & NONCOMBUSTIBLE BOARD INSTALLATION - CLEAN FACE

11. Place batteries in receiver boxes and remotes using instructions provided. Verify remote is communicating with receiver.

Important! If installing a decorative front, an offset between the finishing materials and fireplace opening is required. Refer to the installation instructions provided with the decorative front for more information.

For installation of the DFL601BL-1, DFL602BL, DFL721BL, and DFL722BL kits, 1/2-inch unfinished space is required to either side of the fireplace installation.

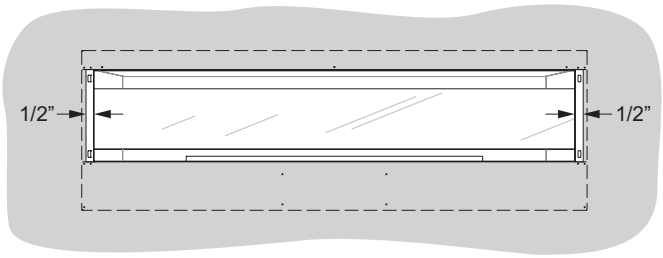

For installation of the DFL602NB & DFL722NB kits, 7/8-inch unfinished space is required on all four sides of the fireplace opening.

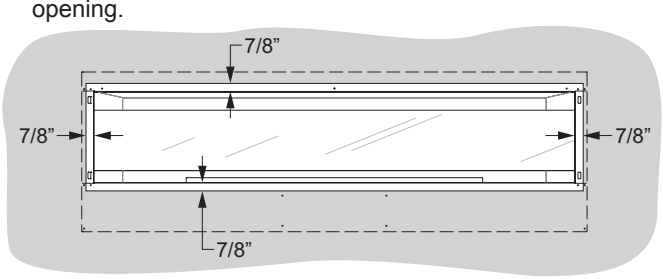

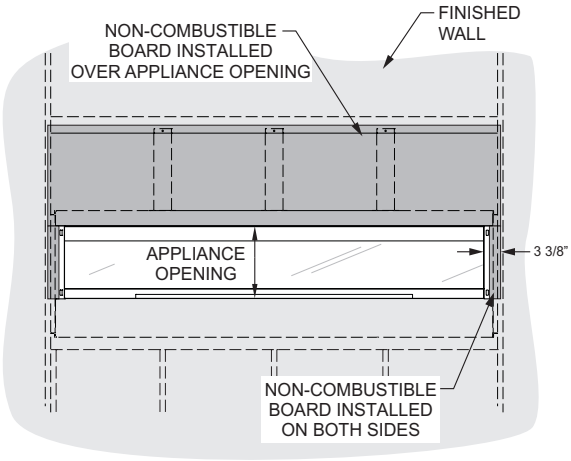

Figure 32

NOTICE: Standoffs and Non-Combustible Board shown for reference

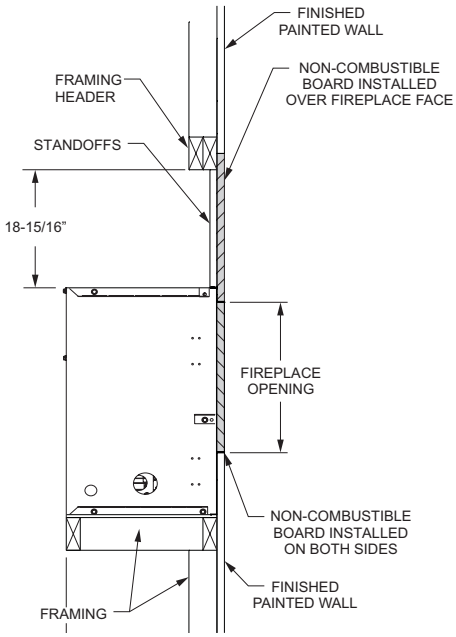

Figure 33

NOTICE: Nailing Flanges and Non-Combustible Board shown for reference.

12. Install Non-Combustible Board. **See Figure 32.**

- Non-combustible board has been provided with the fireplace.
- Do not attach non-combustible board to the fireplace. Attach non-combustible board only to side studs, standoffs and header board.
- Space non-combustible board 1/16 inch off of fireplace opening flanges to allow for expansion during operation.
- Predrill holes into non-combustible board and counter-sink.
- For best results treat non-combustible board and area around the board with Kilz prior to applying adhesive or sealing compound.
- Apply adhesive in joints between non-combustible board panels.
- Use only high-temperature adhesive and high-temperature paints rated for minimum 300°F with the non-combustible board.

13. Finish Wall.

- Use woven fiberglass joint tape and Durabond 45 joint compound for best results when finishing non-combustible panel and drywall joints around fireplace.
- Tile or noncombustible materials can be applied on top of the non-combustible board and finished wall as their instructions require.

INSTALLATION OPTION 2 - FLUSH MOUNT

Attention!

The installation steps on pages 26 - 29 are for Installation Option 2 - Flush Mount.

See pages 21 - 24 for installing the fireplace for Installation Option 1 - Clean Face.

This type of installation will allow you to apply tile, marble, stone or other non-combustible material over the face of the fireplace cabinet, up to the flange opening. **See Figures 39 and 40.**

FRAMING - FLUSH MOUNT

1. Frame in rough opening.
   - This fireplace is designed to be mounted on a hard, flat surface or raised platform.
   - Use dimensions shown in **Figure 34** for a conventional rough opening.
   - Use **Figure 35** for an elevated installation. Provide support to the bottom of the fireplace.
   - Use dimensions shown in **Figure 36** for corner rough opening. Be sure to provide gas line and electrical power for fireplace assembly.
2. Refer to Junction Box Wiring section on page 17 for details on electrical requirements.
3. Verify gas and electrical lines are ready for fireplace installation. (See Gas Supply Page 18)

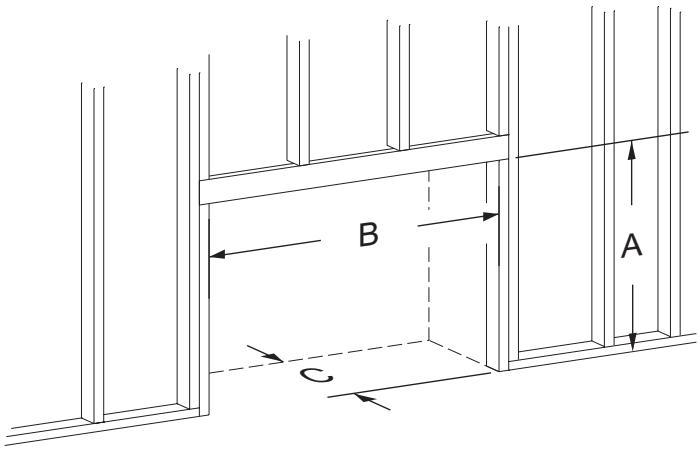

Figure 34 - Rough Opening for Installing in Wall

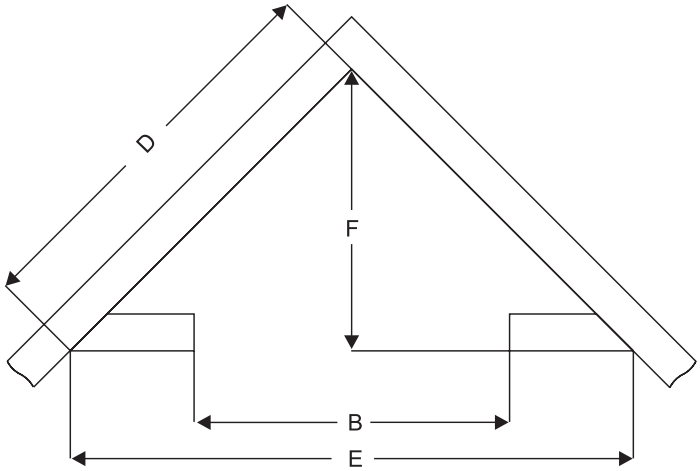

Figure 36 - Rough Opening for Installing in Corner

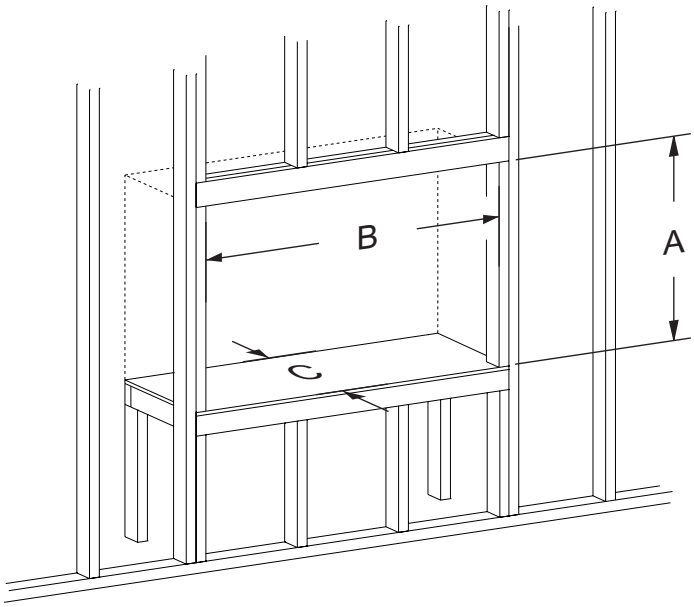

Figure 35 - Rough Opening for Elevated Installation

TABLE 3 - MINIMUM DIMENSIONS (in inches) FOR FIGURES 34 - 36						
Model	**A**	**B**	**C**	**D**	**E**	**F**
VFLL60FP	41-1/4	65	11	61-3/4	87-1/4	43-3/4
VFLL72FP	41-1/4	77	11	70-3/16	99-1/4	49-3/4

* Minimum clearance with 1/2-inch non-combustible board over face of fireplace.

NAILING FLANGES & STANDOFF BRACKETS - FLUSH MOUNT

NOTICE: You must use the nailing flanges and mounting brackets that are supplied with the fireplace. The brackets are shipped under the burner cover, inside the fireplace.

1. Locate the three steel middle standoff under the burner cover. **See Figure 37.**

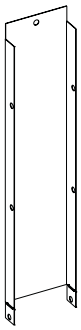

Figure 37

2. The brackets have a perforation located on each end. Bend them at the perforation. (See Figure 38)

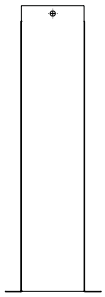

Figure 38

3. Secure the standoff brackets to the fireplace top with six screws as shown in **Figure 39.** The screws are located in the hardware packet inside the envelope pack. There are holes located in the top of the fireplace for each standoff bracket. The hole closer to the front edge of the fireplace is for mounting noncombustible board around the opening (Finishing Option 1). The other hole is for mounting the non-combustible board flush to the fireplace face (top, side and bottom) (Finishing Option 2).

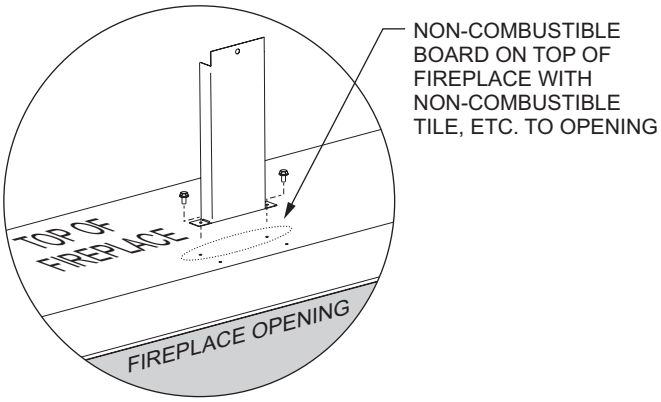

Figure 39

4. On the top and bottom of each side are side framing standoffs. Use pliers to bend the side framing standoff 90 degrees away from the cabinet. **See Figure 41.**
5. Locate nailing flanges in the envelope pack. The holes in the nailing flanges allow different size boards and different locations for the boards. **See Figure 36.** Bend the brackets at 90° angles. Install four nailing flanges with two 10 x 1/2 screws (each). **See Figure 41.** The hole closer to the front edge of the fireplace is for Installation Option 1. The other hole is for Installation Option 2. Notice: The non-combustible board provided is 1/2-inch thick.

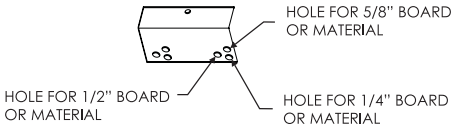

Figure 40

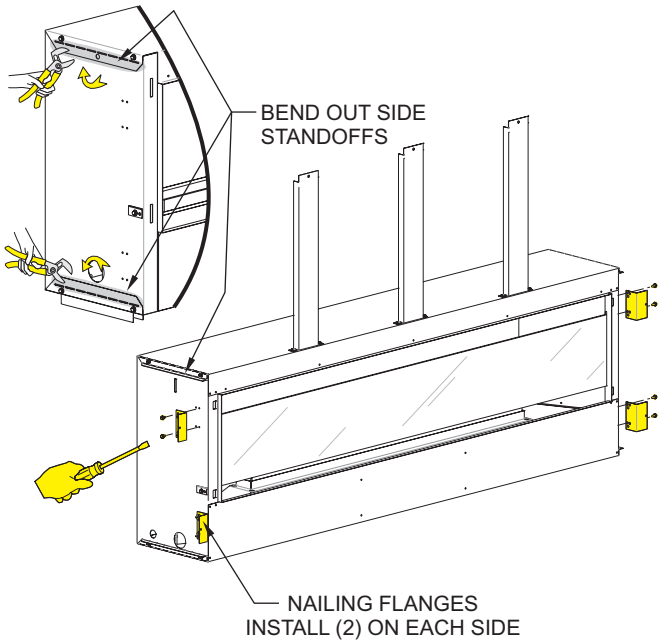

Figure 41

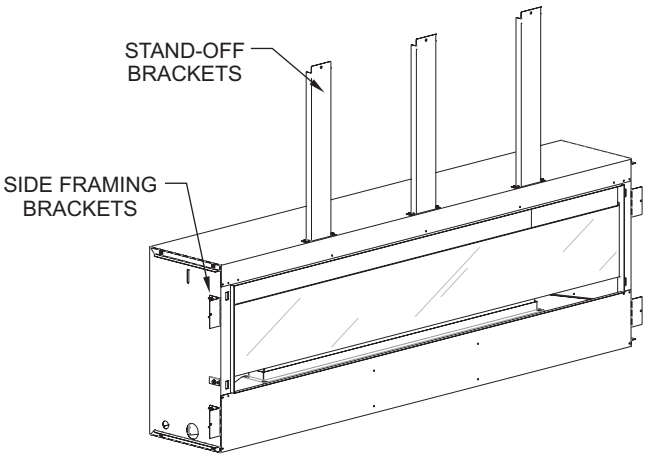

Figure 42

FIREPLACE & NONCOMBUSTIBLE BOARD INSTALLATION - FLUSH MOUNT

1. Insert fireplace into enclosure.
2. Level fireplace.
3. Secure three middle mounting brackets with drywall screws to the framed opening above the fireplace as shown in **Figure 43.**
   NOTICE: The drywall screws are located in the instruction envelope packet. Secure fireplace on left and right through side nailing flanges.
4. Install the fireplace cabinet face flush with the wall-board, secure the nailing flanges at the top and sides of the fireplace with a 1/2-inch setback. This allows you to use the supplied non-combustible board above the fireplace.
5. Check gas lines for leaks.
6 Plug AC adapter and LED transformer to junction box.
7. Install the wall-mounted control box within 10 feet of the center of the fireplace. **See Figure 43.**

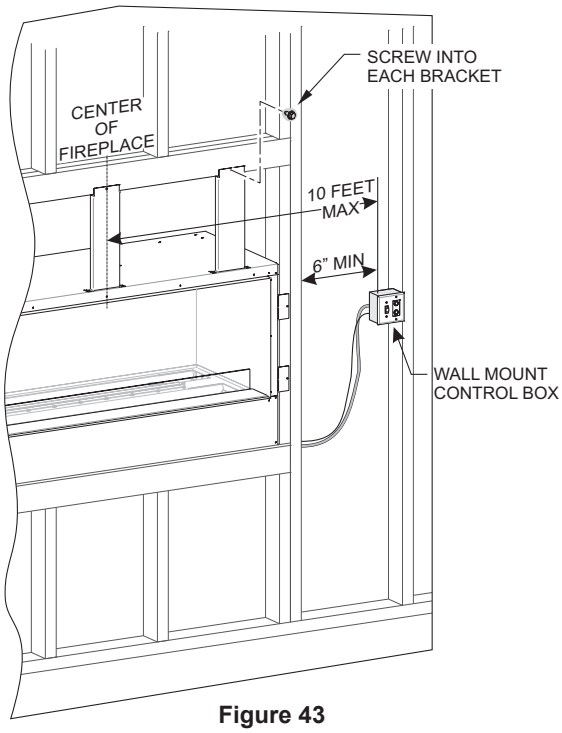

Figure 43

8. Install a plastic bushing in both the liner and outer walls of the fireplace. (See Figure 44 & 45)

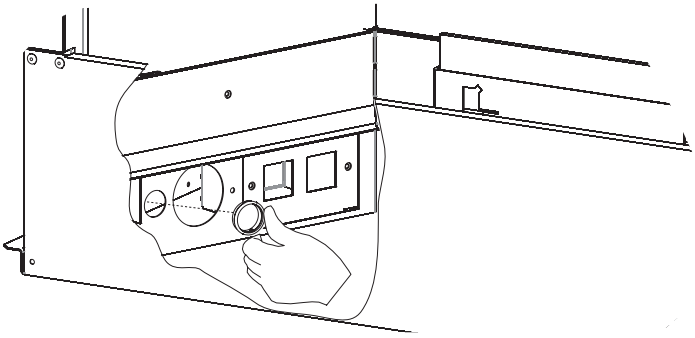

Figure 44

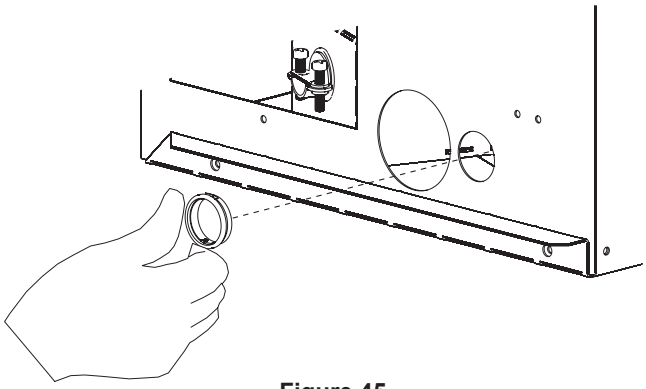

Figure 45

9. Route the yellow LED wire harness, grey remote receiver harness,and red/black battery backup harness through the bushings to the wall mount controls and connect. **See Figure 46.**

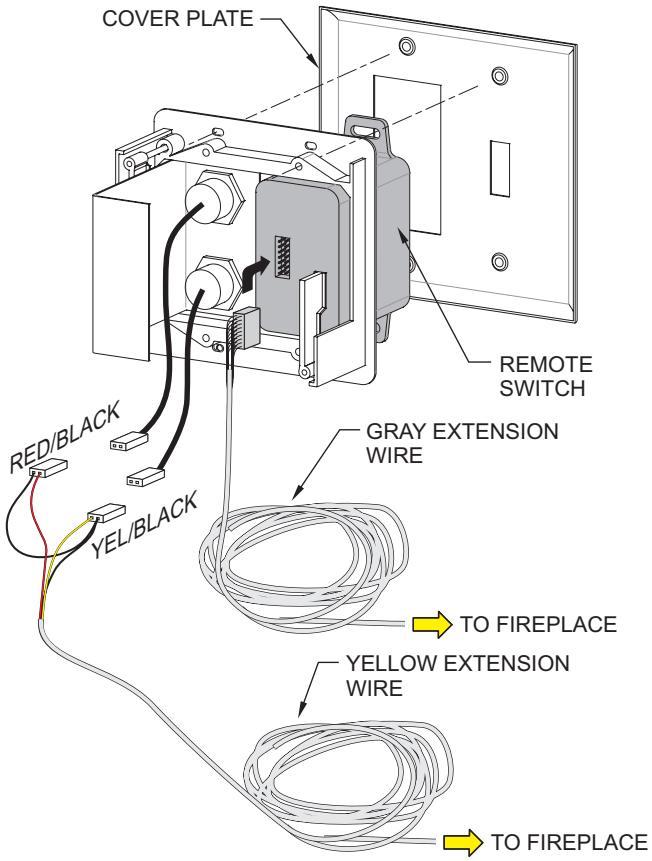

Figure 46

10. Set receiver in wall box to remote. Set switch on side of heat shield to intermediate pilot (up).

*If switch is in "standing pilot" (down position, the pilot will ignite automatically when power to the fireplace is turned on .

FIREPLACE & NONCOMBUSTIBLE BOARD INSTALLATION - FLUSH MOUNT

11. Place batteries in receiver boxes and remotes using instructions provided. Verify remote is communicating with receiver.

Important! If installing a decorative front, an offset between the finishing materials and fireplace opening is required. Refer to the installation instructions provided with the decorative front for more information.

For installation of the DFL601BL-1, DFL602BL, DFL721BL, and DFL722BL kits, 1/2-inch unfinished space is required to either side of the fireplace installation.

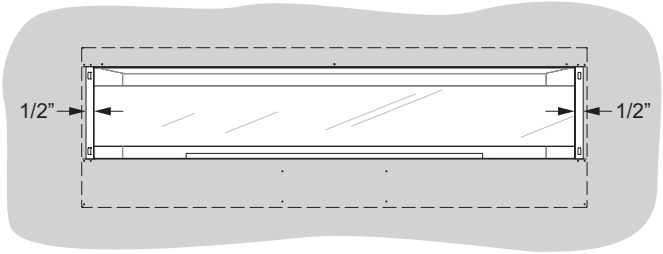

For installation of the DFL602NB & DFL722NB kits, 7/8-inch unfinished space is required on all four sides of the fireplace opening.

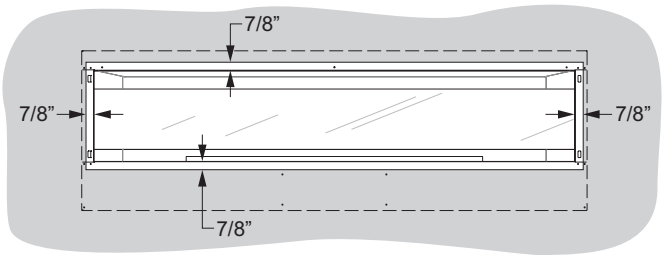

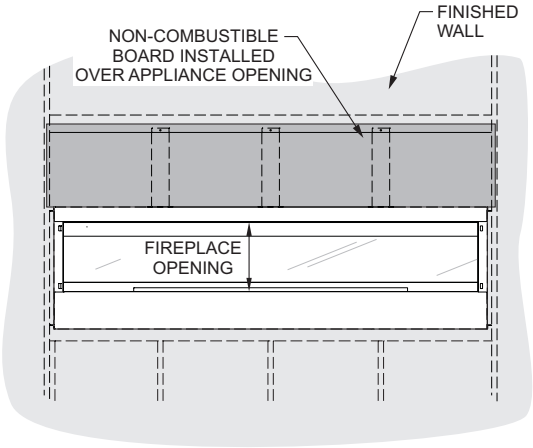

Figure 47

NOTICE: Standoffs and Non-Combustible Board shown for reference.

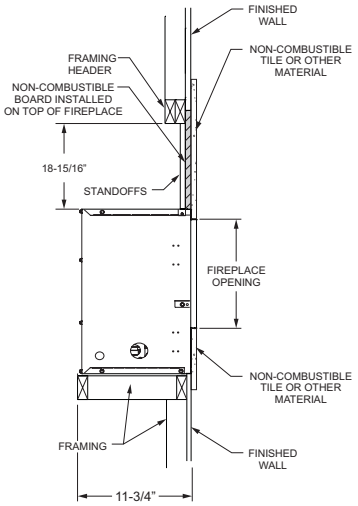

Figure 48

NOTICE: Standoffs Brackets and Non-Combustible Board shown for reference.

12. Install Non-Combustible Board. **See Figure 47.**
- Do not attach non-combustible board to the fireplace. Attach non-combustible board only to side studs, standoffs and header board.
- Predrill holes into non-combustible board and counter-sink.
- For best results treat non-combustible board and area around the board with Kilz prior to applying adhesive or sealing compound.
- Apply adhesive in joints between non-combustible board panels.
- Use only high-temperature adhesive and high-temperature paints rated for minimum 300ºF with the non-combustible board.

13. Finish Wall.
- Use woven fiberglass joint tape and Durabond 45 joint compound for best results when finishing non-combustible panel and drywall joints around fireplace.
- Tile or noncombustible materials can be applied on top of the non-combustible board and finished wall as their instructions require.

Notice For Finishing Materials

The wall above the fireplace will become hot. Install the non-combustible board supplied with the fireplace before adding paint, tile or stone. Attach tile or other non-combustible products to the fireplace face and to the non-combustible area using adhesives designed for high-temperature applications. Follow the manufacturer's instructions for application and curing times. Heat from the fireplace may cause incorrectly installed materials to fail. If you are painting above the fireplace, use a coating designed for high temperature environments and follow the manufacturer's instructions for surface preparation, application and curing. Heat from the fireplace may cause incorrectly applied coatings to fail or discolor.

⚠ CAUTION

Failure to use a 300°F minimum adhesive may allow the finishing material to fall.

COMPLETING INSTALLATION - CLEAN FACE & FLUSH MOUNT

1. Replace LED reflector.
2. Retrieve shorter glass and install in front of burner.
3. If installing an optional liner, install them now. Refer to the instructions provided with the liner kit.
4. Install the burner screens as shown in **Figure 49**. If installing an optional log set, refer to the log set instruction manual for placing the log pins into the burner screens.

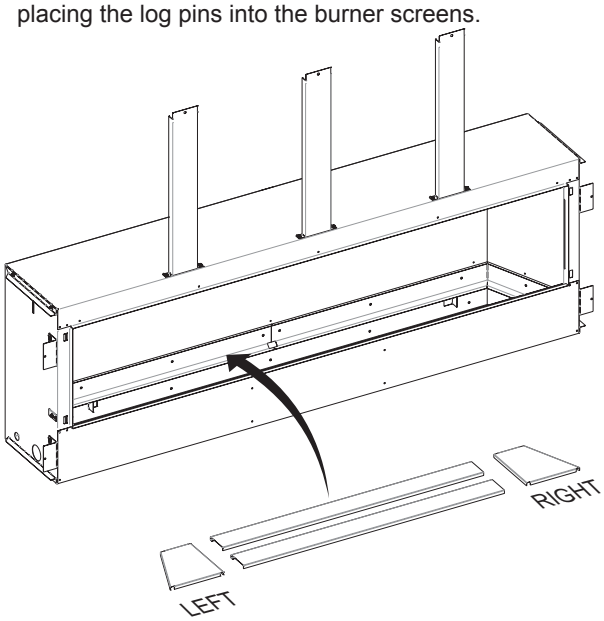

Figure 49

NOTICE: The flange on the bottom of the front and rear burner screens must be toward the rear of the fireplace. **See Figure 50.**

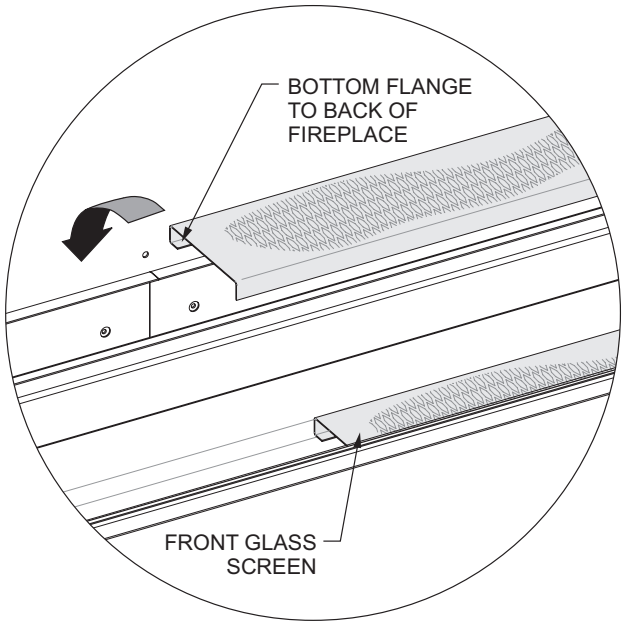

Figure 50

5. If installing an optional log set, install it now. Refer to the installation instructions provided with the log set for proper placement.
6. Place decorative glass on the screens around the burner opening. (Refer to page 33)
7. Install optional decorative surround panel assembly. Refer to instructions included with the surround panel kit.
8. If installing an optional inner top deflector, loosen the five (5) Phillips head screws securing the inner firebox top. Slide the inner top deflector, slotted side first, between the inner firebox top and the fireplace opening until the front angle is flush with the opening. The angle on the front of the inner top deflector should point downward. Tighten the five (5) Phillips head screws to lock in place.

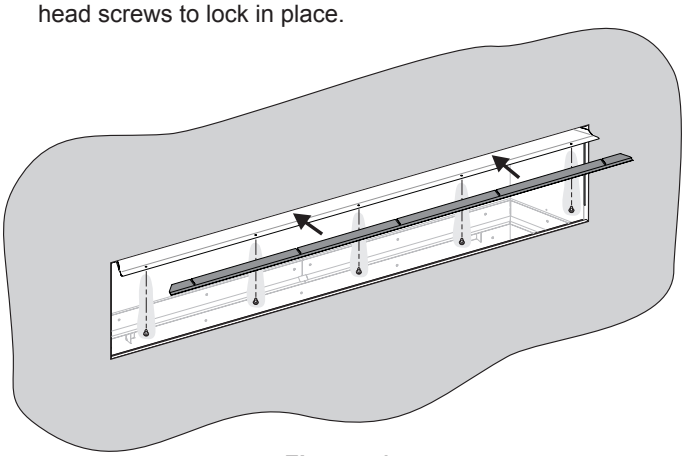

Figure 51

9 Retrieve larger glass and install in slots on the left and right of fireplace. (Refer to page 34)
10. Test fireplace using remote and show owner how to use the remote. Show owner lighting instructions in this manual.
11. Installation of fireplace is complete. Leave this manual with the owner.

FIREPLACE WIRING

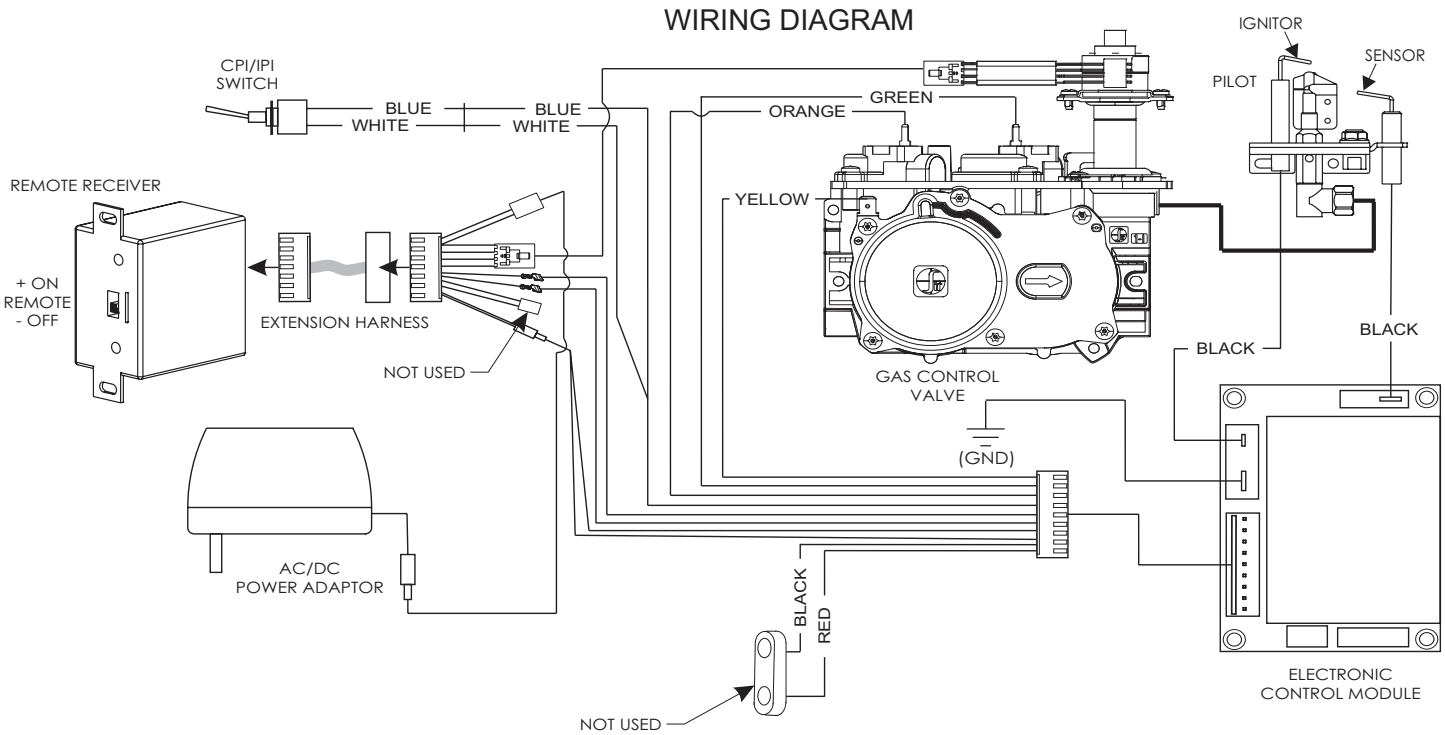

If any of the original wire as supplied with this unit must be replaced, it must be replaced with factory replacement parts.

⚠ CAUTION

Label all wires prior to disconnection when servicing controls. Wiring errors can cause improper and dangerous operation.

Verify proper operation after servicing.

The wire terminals shown in **Figure 52** are not connected.

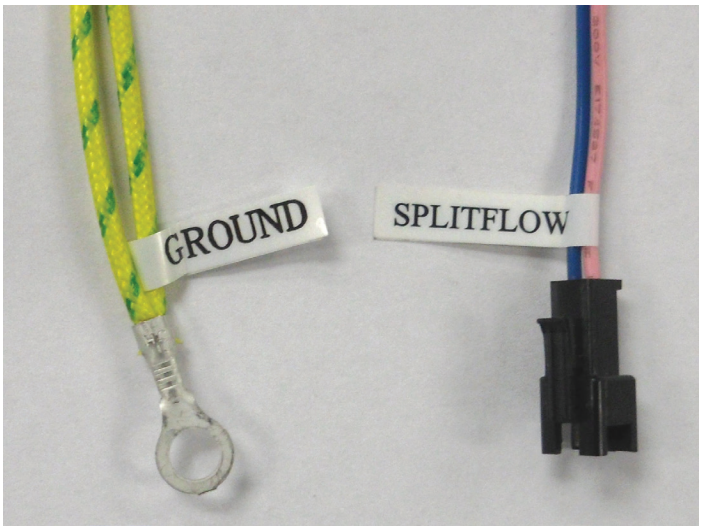

Figure 52

LED WIRING

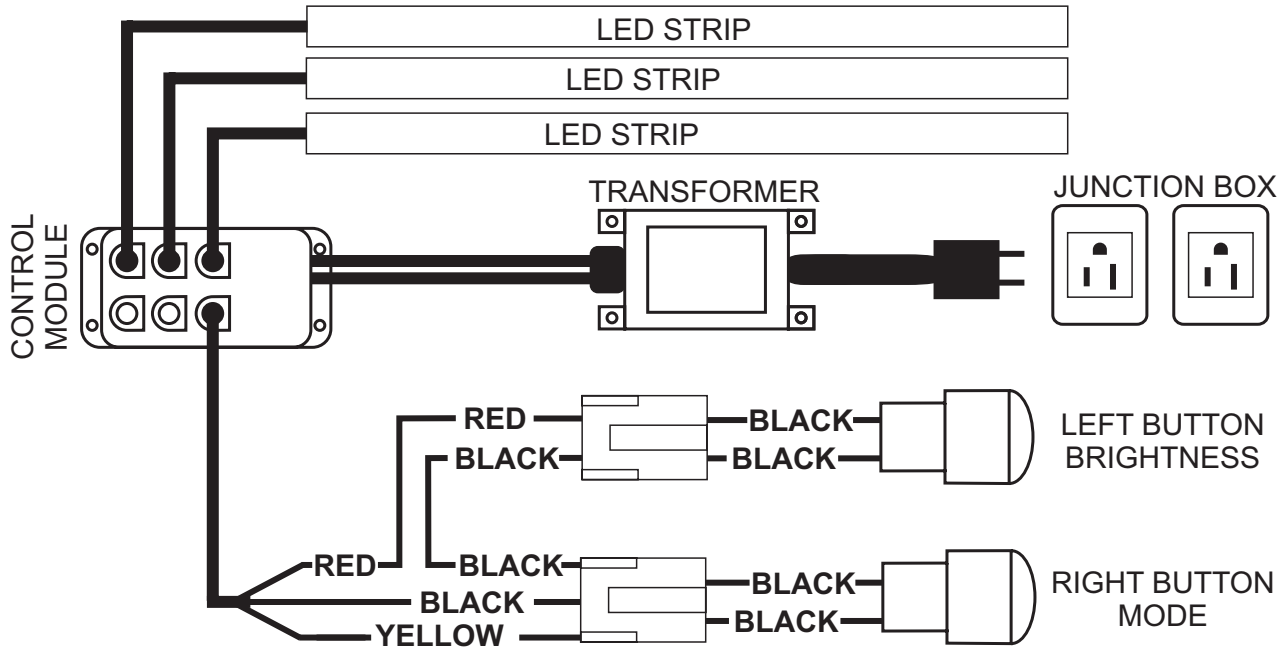

Figure 53

DECORATIVE GLASS INSTALLATION

⚠ WARNING

Failure to position the parts in accordance with the diagrams and instructions below or failure to use only parts specifically approved for use with this fireplace may result in property damage or personal injury.

Notice: During setup the burner may be operated with or without the Decorative accessory options.
Notice: VFLL60 burner pan will accept 5 square feet of Decorative Glass. VFLL72 burner pan will accept 6 square feet of Decorative Glass.

DECORATIVE GLASS AND ROCKS ACCESSORY PLACEMENT

⚠ WARNING

Crushed glass must not be more than a single layer. Do not use more glass than recommended. Using excess glass may cause injury or property damage.

⚠ WARNING

Use only decorative rocks and glass designed for use in a fireplace. Using other materials may cause a situation where injury or property damage may occur.

⚠ WARNING

Never place media materials on or next to the burner.

The Decorative Glass options are available in various colors and package sizes. Choose the size appropriate for your fireplace. See list on page 9.

⚠ CAUTION

To prevent injury, use gloves and eye protection while applying the decorative glass or droplets.

Application of the Decorative Glass or Rocks should only be performed after the burner has been fully installed, secured and tested for leaks.

1. Apply the crushed glass to the shaded area only. **See Figure 54.** Use enough to cover the floor of the fireplace, but do not allow the media to reach higher than the flange surrounding the burner. Never place decorative media inside the flange surrounding the burner itself.
   This fireplace uses crushed glass. Accent glass droplets (1/2 inch) or glass drops (1 inch), and ceramic fiber rocks and pebbles may be added. Mix colors and glass types, but do not exceed the recommended amount of decorative media.

⚠ CAUTION

Glass or rocks must not be placed around the ends or over the front edge of the burner assembly. Do not restrict air flow.

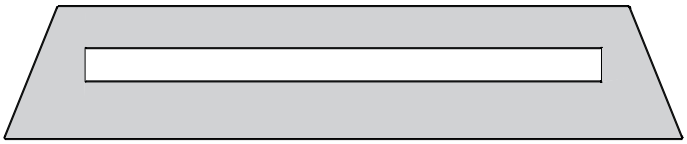

Figure 54

Quantity of Glass	
Model	**Amount**
VFLL60FP	5 square feet
VFLL72FP	6 square feet

2. Replace the glass front into the fireplace by placing the right side into the slots in the firebox. Carefully angle in the left side of the glass and then slide the glass to the left. Settle the glass into the slots by gently lowering it.
See Figures 55 - 58.

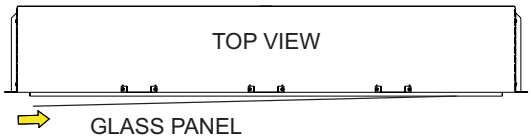

Figure 55

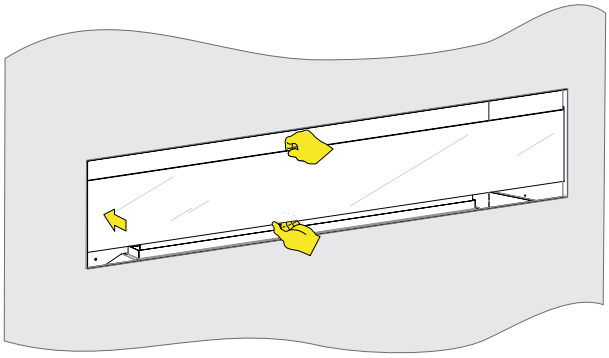

Figure 56

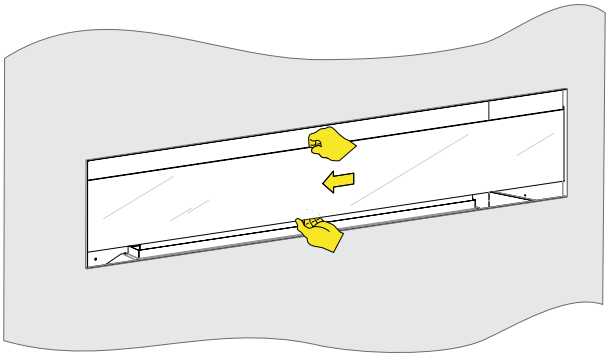

Figure 57

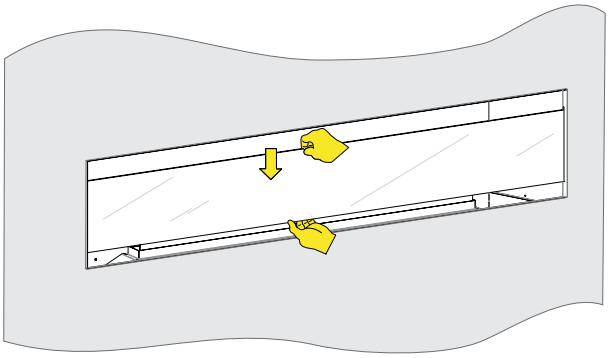

Figure 58

LIGHTING INSTRUCTIONS

FOR YOUR SAFETY READ BEFORE LIGHTING

⚠ WARNING

If you do not follow these instructions exactly, a fire or explosion may result causing property damage, personal injury or loss of life.

A. This appliance has a pilot which must be lighted by hand. When lighting the pilot, follow these instructions exactly.

B. Before lighting smell all around the appliance area for gas. Be sure to smell next to the floor because some gas is heavier than air and will settle on the floor.

What To Do If You Smell Gas
- Do not try to light any appliance.
- Do not touch any electrical switch;
- Do not use any phone in your building.
- Immediately call your gas supplier from a neighbor's phone. Follow the gas supplier's instructions.
- If you cannot reach your gas supplier, call the fire department.

C. If applicable, use only your hand to turn the gas shutoff valve handle. Never use tools. If the handle will not turn by hand, don't try to repair it; call a qualified service technician. Force or attempted repair may result in a fire or explosion.

D. Do not use this appliance if any part has been under water. Immediately call a qualified service technician to inspect the appliance and to replace any part of the control system and any gas control which has been under water.

LIGHTING INSTRUCTIONS

1. STOP! Read the safety information above.
2. Turn OFF electric power to the appliance.
3. Remove front surround panel assembly or bottom louver if included.
4. Turn gas shutoff valve counterclockwise ↺ to On position.
5. Wait ten (10) minutes to clear out any gas. Then smell for gas, including near the floor. If you smell gas, STOP! Follow B in the safety information above on this page. If you do not smell gas, go to the next step.
6. Turn ON electric power to the appliance.
7. Find pilot - Follow metal tube from gas control. The pilot is behind the burner on the right side.
8. Turn main flame to on. If the pilot does not light within 60 seconds, stop and go to Step 5.
9. Refer to remote control instructions for detailed information, control features, and operation. ***NOTICE:*** There is a CPI/IP switch behind the right side panel that allows for a continuous standing pilot mode or an intermittent pilot mode. See appliance manual for location of this switch. If the pilot or burner does not stay lit (in the standing pilot mode), stop and immediately call a qualified service technician or gas supplier.
10. If the burner or pilot does not operate properly after several tries, turn the gas valve clockwise ↻ to OFF and call your service technician or gas supplier.
11. Replace the front surround assembly or close bottom louver assembly.
12. Operation of the gas valve is controlled by a manual on/off switch or a hand held remote control. Refer to remote instructions for detailed operation information.

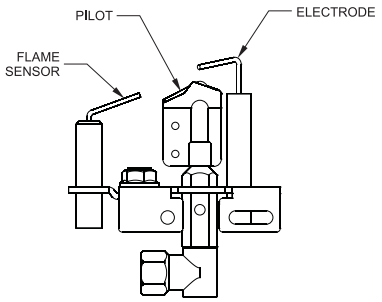

GAS SHUTOFF VALVE

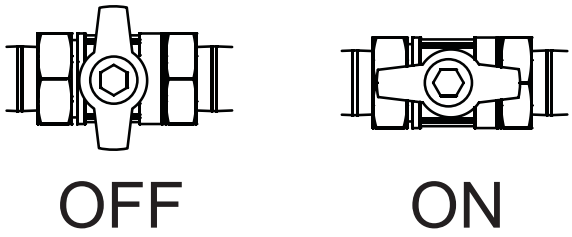

TO TURN OFF GAS TO FIREPLACE

1. Set REMOTE/OFF/ON switch to OFF.
2. Turn off all electric power to the appliance if service is to be performed (if applicable).
3. Turn gas shutoff clockwise ↻ to OFF. Do not force.

PILOT FLAME CHARACTERISTICS

Figure 59 shows a correct pilot flame pattern. The correct flame will be blue and will extend beyond the flame sensor. The flame will surround the flame sensor just below the tip. A slight yellow flame may occur where the pilot flame and main burner flame meet. Figure 60 shows an incorrect pilot flame pattern. The incorrect pilot flame is not touching the flame sensor. This will cause the flame sensor to cool. When the flame sensor cools, the fireplace will shut down.

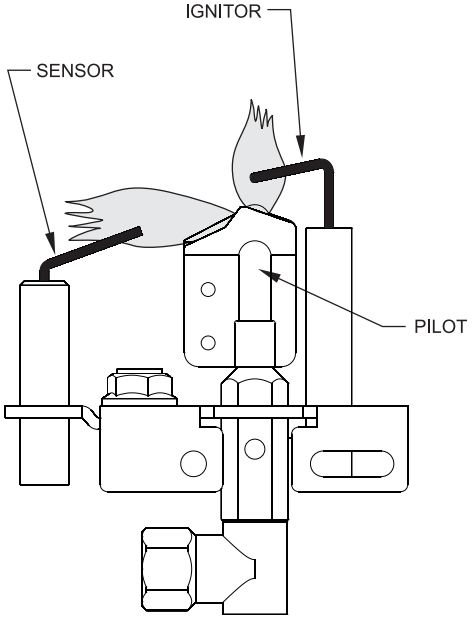

Correct Pilot Flame Pattern - Figure 59

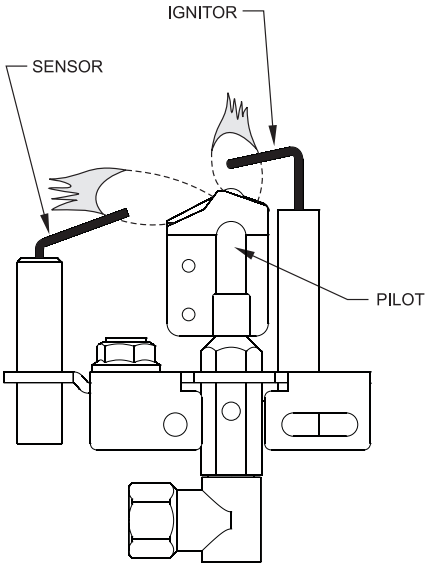

Incorrect Pilot Flame Pattern - Figure 60

If pilot flame pattern is incorrect, as shown in **Figure 60**:

- See IP Troubleshooting, pages 42 - 43.

FLAME APPEARANCE

Flames from the pilot (front center of burner) as well as the main flame should be visually checked as the fireplace is installed.

In normal operation at full rate after 10 to 15 minutes, the flame appearance should be sets of yellow flames.

NOTICE: All flames will be random by design, flame height will go up and down.

PROFLAME - IP CONTROL SYSTEM

TECHNICAL DATA	
Remote Control	
Supply voltage	4.5 V (three 1.5 V AAA batteries)
Ambient temperature ratings	0-50°C (32 - 122°F)
Radio frequency	315 MHz
Receiver	
Supply voltage	6.0 V (four 1.5 V AA batteries)
Ambient temperature ratings	0-60°C (32 - 140°F)
Radio frequency	315MHZ

⚠ WARNING

The transmitter and receiver are radio frequency devices. Placing the receiver in or near metal may severely reduce the signal range.

Attention:
- Turn off the main gas supply of the fireplace during installation or maintenance of the receiver.
- Place the receiver's 3-position slider switch in the off (down) position during installation or maintenance.
- Turn off main gas supply to the fireplace prior to removing or reinserting the batteries in the receiver.

TRANSMITTER (REMOTE CONTROL WITH LCD DISPLAY)
The Proflame Transmitter uses a streamline design with a simple button layout and informative LCD display (Figure 61).
The Transmitter is powered by 3 AAA type batteries. A Mode Button is provided to Index between the features and a Thermostat Button is used to turn on/off or index through thermostat functions (Figures 60 and 61).

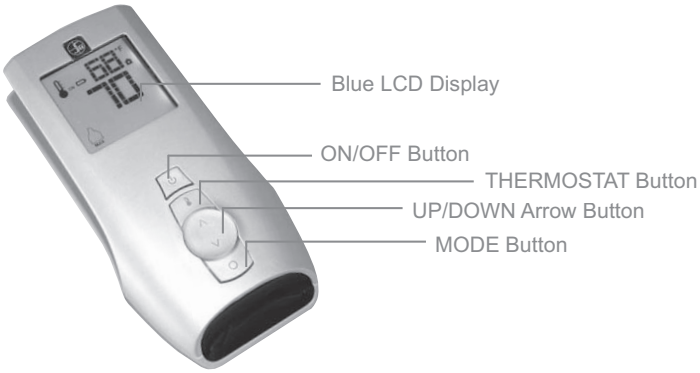

Figure 60 - Proflame Transmitter

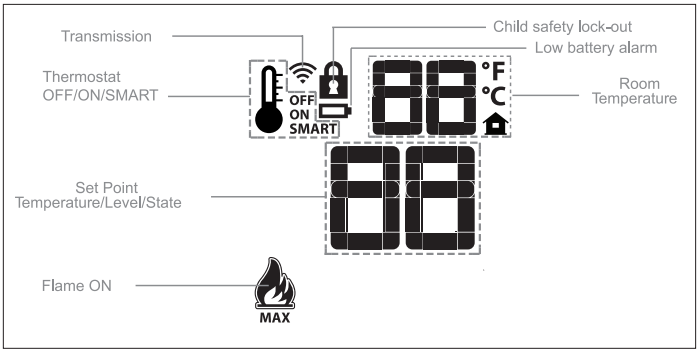

Figure 61 - Transmitter LCD display

RECEIVER
The Proflame Receiver **(Figures 62 and 63)** connects directly to the gas valve and stepper motor with a wiring harness. The Receiver is powered by 4 AA type batteries. The Receiver accepts commands via radio frequency from the Transmitter to operate the fireplace in accordance with the particular Proflame system configuration. The Receiver three position slider switch can be set to one of three positions: Up for ON (Manual Override), middle for Remote (Remote control) or down for OFF.

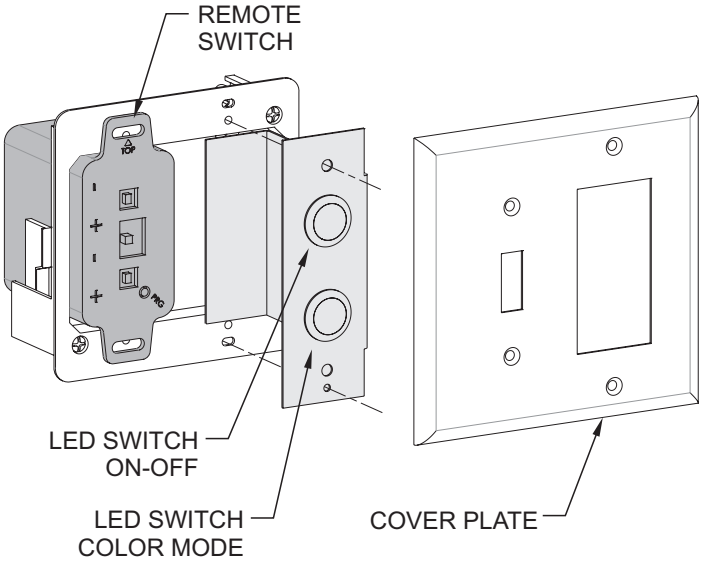

Figure 62 - Proflame Receiver Body Front

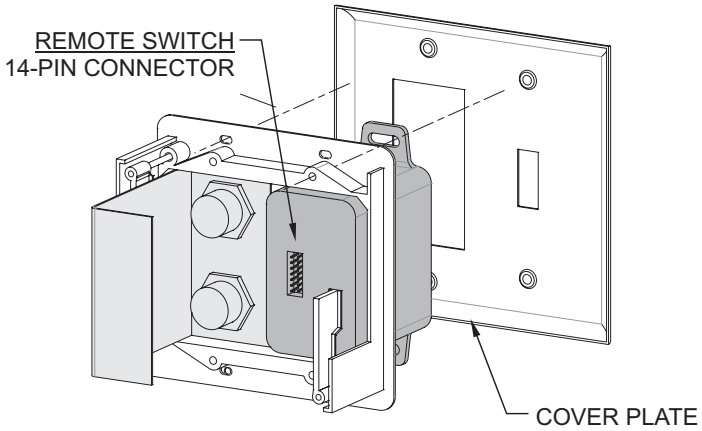

Figure 63 - Proflame Receiver Body Back

5.25 VDC ELECTRONIC CONTROL VALVE

The electronic control valve system includes the ability to switch the pilot from a standing pilot mode to an intermittent pilot mode.

- **IP Mode** - In the Intermittent Pilot mode, when the fireplace is turned ON, it will cause spark to the pilot, light the pilot, then allow the burner to light. When the fireplace is turned to OFF, both the burner and pilot will be OFF.
- **CPI Mode** - In the Continuous Pilot mode, the pilot remains ON continuously even when the burner is turned OFF.

NOTICE: A small toggle switch is located on control module shield that is used to switch from IP (upward position) to the CPI (downward position). **(See Figure 64)**

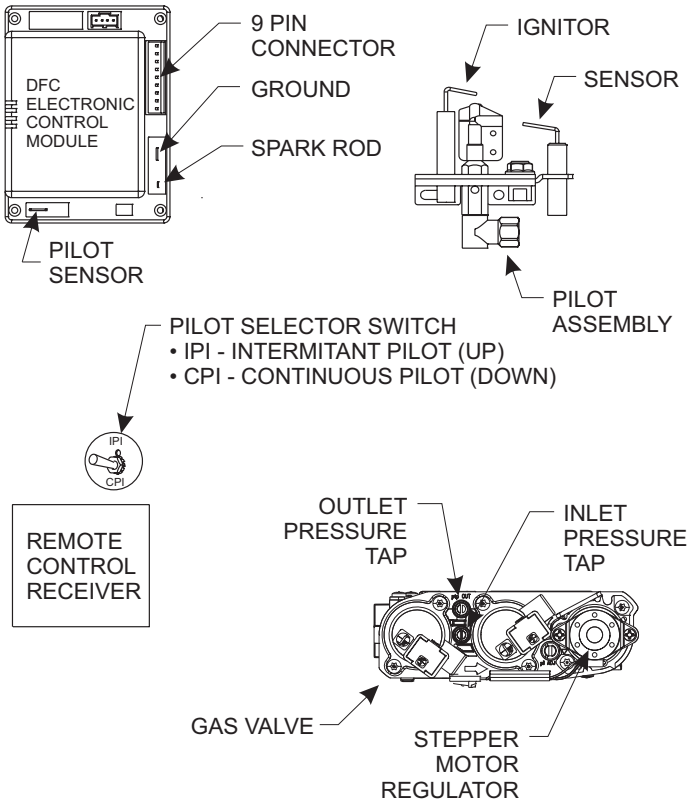

Figure 64

When the fireplace is turned to ON, the electrical current will energize a spark to the pilot igniter. Once the pilot sensor heats up (after a few seconds), the valve will be energized, allowing gas to flow to the burner.

1. Follow the SAFETY and LIGHTING INSTRUCTIONS for Intermittent Pilot controls found in this manual, and on labels found in the control compartment located in the lower cavity of the fireplace.
2. The gas valve has inlet and outlet pressure taps as shown in **Figure 67**. (Refer to page 40 for gas pressure requirements)

CLEANING AND SERVICE

Annual inspection and cleaning by your dealer or qualified service technician is recommended to prevent malfunction and/or sooting.

TURN OFF FIREPLACE AND ALLOW TO COOL BEFORE CLEANING.

Remove any optional decorative covers or decorative glass material. Gloves are recommended.

PERIODIC CLEANING - Refer to parts diagram for location of items discussed below.

- Do not use cleaning fluid to clean any part of fireplace.
- Glass should be cleaned with ammonia-free cleaner. Ammonia will etch or stain glass when heated.
- Remove loose particles and dust from the burner, controls and air shutter.
- Inspect and clean burner air intake hole. Remove lint or particles with brush. Failure to keep air intake hole clean will result in sooting and poor combustion.

ANNUAL CLEANING/INSPECTION - Refer to parts diagram for location of items discussed below.

- Inspect and clean burner air intake hole. Remove lint or particles with vacuum or brush. Failure to keep air intake hole clean will result in sooting and poor combustion.
- Inspect and clean all burner ports.
- Inspect ODS pilot for operation and accumulation of lint at air intake holes.
- Verify flame pattern for proper operation.
- Verify smooth and responsive ignition of main burner.

CLEANING AND PILOT MAINTENANCE

Oxygen Depletion Sensor Pilot

When the pilot has a large yellow tip flame, clean the Oxygen Depletion Sensor as follows:

1. Use canned air to blow through hole A. **(See Figure 65)** This will blow out foreign materials such as dust, lint and spider webs.

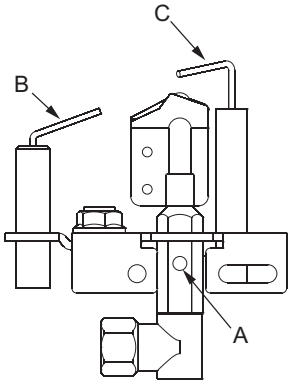

Intermittent Pilot
Figure 65

⚠ WARNING

Never use needles, wires, or similar cylindrical objects to clean the pilot to avoid damaging the calibrated ruby that controls the gas flow.

2. If intermittent pilot fireplace stops working, clean flame sensor B **(Figure 65)** with a damp cloth.
3. If intermittent pilot ignitor does not spark, clean ignitor C **(Figure 65)** with a damp cloth.

CONTROL COMPARTMENT AND BURNER MAINTENANCE

Keep the control compartment and burner area clean by vacuuming or brushing area at least twice a year.

THE FIREPLACE CAN GET VERY HOT – HANDLE ONLY WHEN COOL.

Always turn off gas to the pilot before cleaning. For relighting, refer to lighting instructions located on the rating plate of the fireplace.

Never obstruct the flow of the combustion and ventilation air. Keep the front of the fireplace clear of all obstacles and materials.

BATTERY REPLACEMENT

An intermittent pilot may require more frequent battery changes. To replace the batteries, follow these steps:

1. Remove the cover from the electrical box on the wall.
2. Replace the batteries inside the box.
3. Replace the cover using four (4) #4 x 1/2 Phillips screws.

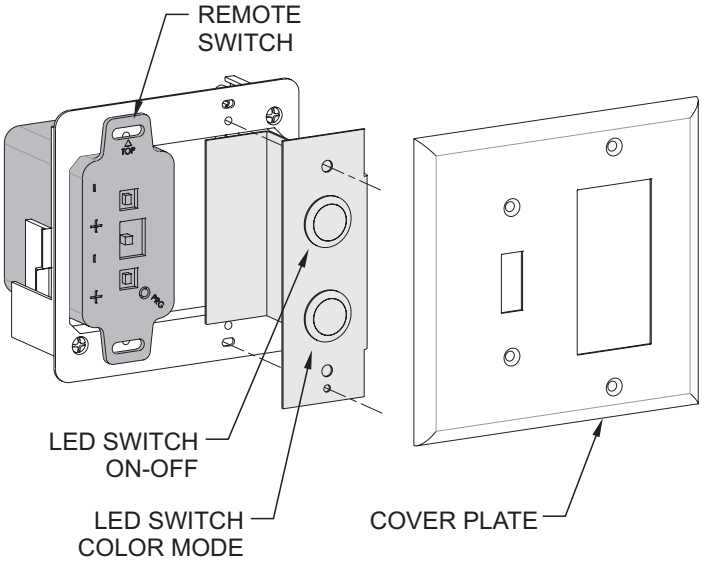

Figure 66

TESTING THE GAS SUPPLY PRESSURE

Natural gas will have a manifold pressure of approximately 3.5 inches w.c. at the pressure regulator outlet with the inlet pressure to the pressure regulator from a minimum of 7.0 inches w.c. for the purpose of input adjustment to a maximum of 10.5 inches w.c.

Propane gas will have a manifold pressure approximately 10.0 inches w.c. at the pressure regulator outlet with the inlet pressure to the pressure regulator from a minimum of 11.0 inches w.c. for the purpose of input adjustment to a maximum of 13.0 inches w.c.
A test gage connection is located on the gas valve for measuring gas pressure. The connections are two contained screws inside tapered hose slip connections.

GAS SUPPLY PRESSURES (inches water column)			
GAS TYPE	**MAXIMUM**	**MINIMUM**	**MANIFOLD**
NAT	10.5	7.0	3.5
LP	13.0	11.0	10.0

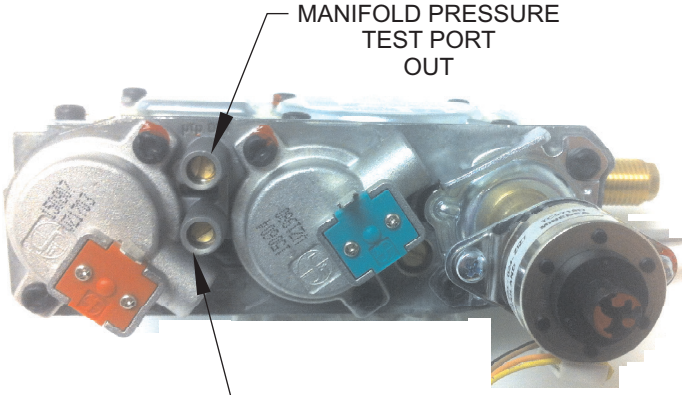

Figure 67

TROUBLESHOOTING

Brief Description of the Components

The Digital Fireplace Control (DFC) is an automatic gas ignition system based on a single micro-controller core. This control manages all functions related to ignition, flame sensing and supervision for atmospheric applications.

The DFC can be set to provide continuous or intermittent ignition control sequences and flame monitoring with safety shutdown in case of failure.

The DFC is set up as a stand alone (AC powered system with battery back up. See IP Lighting Instructions on page 35 and Wiring Diagram on page 31.

Troubleshooting

Before proceeding with the procedures in the following troubleshooting table, verify that the power supply (AC/DC adapter) is present and that the batteries inside the receiver and remote are fresh and installed with correct polarity.

Make sure all the connections between the wire harnesses and system components are proper and positive.

Verify that the static inlet pressure meets the manufacturer's recommended inlet pressure. If necessary adjust the line pressure regulator.

If the recommended actions for the following troubleshooting chart do not help to address the problem consider replacing wiring harnesses.

⚠ WARNING

Any actions performed on the gas valve must be performed in accordance with this instruction manual. Likewise, any actions performed on the DFC or other system components must be done in accordance with the individual component instructions.

Replacement of components must be performed in accordance with this instructions manual.

TROUBLESHOOTING (CONT'D)

PROBLEM OBSERVED	POSSIBLE CAUSE	CORRECTIVE MEASURE
Gas odor during setup	Gas Leak	**What To Do If You Smell Gas** Do not try to light any appliance. Do not touch any electrical switch; Do not use any phone in your building. Immediately call your gas supplier from a neighbor's phone. Follow the gas supplier's instructions. If you cannot reach your gas supplier, call the fire department.
Gas odor before first ignition	Gas Leak	
Fireplace is on but no flame and pilot is not trying to light	Gas Line Valve turned off	Turn shutoff valve to open position
	Control module in lockout	Turn power to fireplace off and then back on
Pilot continues to spark when pilot is lit.	Not enough gas to pilot	Wait for pilot flame to strengthen
	Low Gas Pressure	Check pressures. See page 40.
	Pilot igniter/sensor is dirty	Clean pilot. See maintenance page 39.
	Pilot not grounded well	Check ground connections
	Draft in firebox	Redirect draft from room or wall
	Pilot sensor has been bent	Replace pilot
Pilot will not ignite, or will not stay lit	Pilot igniter/sensor is dirty	Clean flame sensor and pilot igniter. See maintenance page 39.
	Pilot not grounded well	Check ground connections
	Sensor Wire loose	Check sensor wire terminals
	Gas pressure incorrect	Adjust gas pressure
	Pilot Gas Line bent or kinked	Replace pilot tube
	Faulty pilot, Sensor bent	Replace Pilot
	Faulty valve	Replace Valve
Burner takes too long to fully light	Low gas pressure	Check gas supply pressure
	Clogged or dirty carryover/burner ports	Clean ports
	Blocked orifice	Check orifice opening
	Faulty valve	Replace valve
Burner does not light but pilot remains on	Low gas pressure	Check gas supply pressure
	Clogged or dirty burner ports	Clean burner ports
	Blocked orifice	Check orifice opening
	Loose wire connections	Check valve/control module connections
	Faulty pilot	Replace pilot
	Faulty valve	Replace valve
Burner lights but does not stay lit while pilot remains on	Low gas pressure	Check gas supply pressure
	Loose sensor wire	Check wire connection
	Faulty valve	Replace valve
	Faulty pilot or thermocouple	Replace Safety pilot
	Clogged or dirty burner ports	Clean burner ports
	Room temperature is higher than thermostat setting	Move remote away from fireplace
		Set higher temperature on remote/thermostat
	Remote control batteries failing	Replace batteries in remote transmitter and receiver

TROUBLESHOOTING (CONT'D)

PROBLEM OBSERVED	POSSIBLE CAUSE	CORRECTIVE MEASURE
Burner & pilot light but will not stay lit	Flame sensor dirty	Clean pilot sensor
	Low gas pressure	Check gas supply pressure
	Not enough fresh air for pilot	Open door or window - ventilate
	Clogged or dirty burner ports	Clean burner ports
	(For fireplace equipped with optional thermostat or thermostat remote) Room temperature is higher than thermostat setting	Move (optional) remote away from fireplace
		Set higher temperature on (Optional) remote/ thermostat
	Remote control batteries failing	Replace batteries in remote transmitter and receiver
	Faulty pilot or thermocouple	Replace pilot
Incorrect burner flame	Incorrect gas supply or pressure	Check gas supply pressure
	Blocked orifice	Check orifice opening
	Clogged or dirty burner ports	Clean burner ports
	Faulty valve	Replace valve
	High altitude	Adjust orifice size for altitude
Backfire of burner	Blocked orifice	Check orifice opening
	Clogged or dirty burner ports	Clean burner ports
	Low gas pressure	Check gas supply pressure
Fireplace produces unwanted odors	Vapors from paint, hairspray, glue, etc.	Ventilate room until odor stops. Do not use paint, hairspray, glue, etc around fireplace
	Initial burn-off of manufacturing chemicals	Ventilate room until odor stops
Whistle noise from fireplace	Check gas pressure	Adjust gas pressure to recommended setting.
	Air in gas line	Bleed lines
	Control knob not in fully open position	Open control knob to full position
	Spiral gas flex line pinched or too small diameter line	Straighten flex line where pinched or replace gas feed line with larger diameter

EXPLODED VIEW

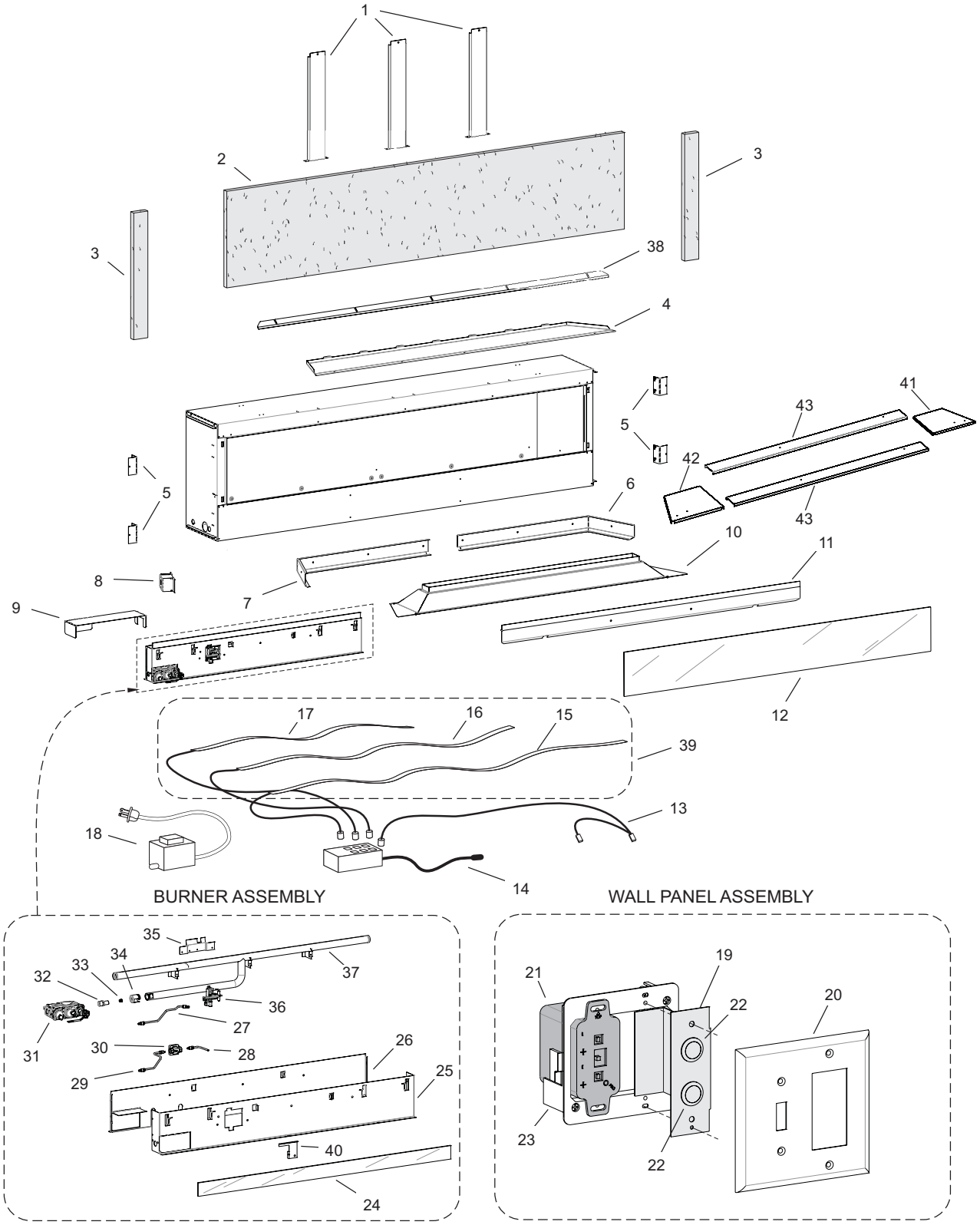

⚠ WARNING

Failure to position the parts in accordance with these diagrams or failure to use only parts specifically approved with this heater may result in property damage or personal injury.

PARTS LIST

INDEX NO.	PART NUMBER		DESCRIPTION
	VFLL60FP	VFLL72FP	
1	36787	36787	Standoff Bracket (3 Required)
2	36774	36804	Non-Combustible Board - Top
3	36825	36825	Non-Combustible Board - Side (2 Required)
4	36754	36790	Inner Firebox Top
5	28688	28688	Nailing Flange (4 Required)
6	36782	36810	Reflector Rear - Right
7	36783	36811	Reflector Rear - Left
8	36765	36765	Junction Box
9	36826	36826	Control Shield
10	36777	36805	Center Reflector Assembly
11	36797	36798	Reflector Front Assembly
12	R12290	R12291	Glass - Front
13	R12294	R12294	Wire Harness - Switches
14	R12284	R12284	Control Module - LED
15	R11918	R11986	LED Lighting Strip - Front
16	R11918	R11918	LED Lighting Strip - Rear Right
17	R11918	R11986	LED Lighting Strip - Rear Left
18	R11920	R11920	Transformer - LED
19	36827	36827	Bracket - LED Buttons
20	R12296	R12296	Wall Plate
21	R11235	R11235	Remote Receiver
22	R11921	R11921	Switch Button - LED (2 Required)
23	R12295	R12295	Wall Box
24	R12292	R12293	Glass - Burner
25	36772	36802	Burner Box - Front
26	36773	36803	Burner Box - Back
27	32680	32680	Pilot Tube Assembly (LP Only)

INDEX NO.	PART NUMBER		DESCRIPTION
	VFLL60FP	VFLL72FP	
28	36770	36770	Pilot - Regulator Tube Assembly (NAT Only)
29	36769	36769	Valve - Regulator Tube Assembly (NAT Only)
30	R7063	R7063	Regulator - Pilot (NAT Only)
31	R11234	R11234	Valve - LP
31	R11233	R11233	Valve - NAT
32	P313	P313	Fitting - Orifice Holder
33	P304	P304	Orifice - LP
33	P211	P211	Orifice - NAT
34	R7624	R7624	Air Shutter
35	34440	34440	Pilot Bracket
36	R11327	R11327	Pilot - LP
36	R11328	R11328	Pilot - NAT
37	R12288	R12289	Burner Tube Assembly
38	37486	37487	Inner Top Deflector
39	36876	37344	LED Replacement Kit (Includes #15,16,17)
40	37482	37482	Pilot Shield (NAT Only)
41	36784	36812	Glass Support, Right
42	36785	36813	Glass Support, Left
43	36786	36814	Glass Support, Center (2 Required)
N/S	R11597	R11597	Tubing Ferrule - Pilot
N/S	R11598	R11598	Tubing Nut - Pilot
N/S	R1978	R1978	Tubing Nut and Ferrule - Valve
N/S	B100100	B100100	Fitting - 3/8 Flare to 3/8 Pipe
N/S	R7591	R7591	Flex Line
N/S	R11128	R11128	Power Adaptor, 7.0 VDC
N/S	R11127	R11127	Control Module - Proflame
N/S	R11123	R11123	Control Module Harness
N/S	R11237	R11237	Receiver Harness
N/S	R11973	R11973	Receiver Harness Extension
N/S	R11236	R11236	Remote
N/S	R11332	R11332	Flame Sensor Wire
N/S	R11333	R11333	Ignitor Wire
N/S	R11441	R11441	Receptical (2 Required)
N/S	37116	37116	Junction Box Cover

MASTER PARTS DISTRIBUTOR LIST

To Order Parts Under Warranty, please contact your local Empire dealer. See the dealer locator at www.empirecomfort.com. To provide warranty service, your dealer will need your name and address, purchase date and serial number, and the nature of the problem with the unit.
To Order Parts After the Warranty Period, please contact your dealer or one of the Master Parts Distributors listed below. This list changes from time to time. For the current list, please click on the Master Parts button at www.empirecomfort.com. Please note: Master Parts Distributors are independent businesses that stock the most commonly ordered Original Equipment repair parts for Heaters, Grills, and Fireplaces manufactured by Empire Comfort Systems Inc.

Dey Distributing
1401 Willow Lake Boulevard
Vadnais Heights, MN 55101

Phone: 651-490-9191
Toll Free: 800-397-1339
Website: www.deydistributing.com
Parts: Heater, Hearth and Grills

F. W. Webb Company
200 Locust Street
Hartford, CT 06114

Phone: 860-722-2433
Toll Free: 800-243-9360
Fax: 860-293-0479
Toll Free Fax: 800-274-2004
Websites: www.fwwebb.com & www.victormfg.com
Parts: Heater, Hearth and Grills

East Coast Energy Products
10 East Route 36
West Long Branch, NJ 07764

Phone: 732-870-8809
Toll Free: 800-755-8809
Fax: 732-870-8811
Website: www.eastcoastenergy.com
Parts: Heater, Hearth and Grills

HOW TO ORDER REPAIR PARTS

Parts Not Under Warranty

Parts can be ordered through your Service Person, Dealer, or a Master Parts Distributor. See this page for the Master Parts Distributors list. For best results, the **service person or dealer** should order parts through the distributor. Parts can be shipped directly to the **service person/dealer**.

Warranty Parts

Warranty parts will need a proof of purchase and can be ordered by your Service Person or Dealer. Proof of purchase is **required** for warranty parts.

All parts listed in the Parts List have a Part Number. When ordering parts, first obtain the Model Number and Serial Number from the name plate on your equipment. Then determine the Part Number (**not** the Index Number) and the Description of each part from the following illustration and part list. Be sure to give all this information . . .

Fireplace Model Number _____ Part Description _____

Fireplace Serial Number _____ Part Number _____

Type of Gas (Propane or Natural) _____

Do not order bolts, screws, washers or nuts. They are standard hardware items and can be purchased at any local hardware store.

Shipments contingent upon strikes, fires and all causes beyond our control.

FOR THE HOMEOWNER

Empire Comfort Systems has manufactured safe, reliable heating systems since 1932. We take pride in our reputation for quality products, backed by the best sales, service and distribution network in this industry. These fireplace models combine our proven technologies with exceptional artistry and craftsmanship to add beauty and warmth to any home.

There are several decorative options available for your fireplace. Contact your Empire dealer for more information.

CONTEMPORARY LINEAR VENT-FREE GAS FIREPLACE MODELS

VFLL60FP90L(N,P)-1
VFLL72FP90L(N,P)-1

IMPORTANT INFORMATION

⚠ WARNING

Read and follow these safety precautions prior to operating this appliance. Failure to follow these precautions may result in death, injury, or property damage.

Samples and Definitions:

⚠ DANGER

Indicates a hazardous situation which, if not avoided, will result in death or serious injury.

⚠ WARNING

Indicates a hazardous situation which, if not avoided, could result in death or serious injury.

⚠ CAUTION

Indicates a hazardous situation which, if not avoided, could result in minor or moderate injury.

NOTICE: Addresses practices not related to personal injury.

All correspondence should refer to complete Model Number, Serial Number and type of gas. Fill out the Homeowner Reference Section on page 8.

⚠ WARNING

This fireplace is not for use with solid fuels. Improper use of the fireplace can cause serious injury or death from fire, burns, explosions or carbon monoxide poisoning.

Television Considerations

Installing a television above a fireplace has become increasingly popular; however, the area above any fireplace gets hot and most TV manufacturers recommend against placing their products near a heat source.

If you install a television above this fireplace, Empire Comfort Systems accepts no responsibility for damage or injuries. Follow the television manufacturer's installation instructions, including any recommendations regarding proximity to heat sources.

If you have a TV above your fireplace, turn off the fireplace and let it cool completely before servicing or touching any buttons on the TV.

Maintenance and Service

Although the frequency of servicing and maintenance will depend on use and the type of installation, you should have a qualified service technician perform an appliance checkup at the beginning of each heating season. Specific guidelines regarding each appliance maintenance task are listed below.

NOTICE: It is normal for steel appliances to make expansion and/or contraction noise during the start-up or cool-down cycle. Similar noises are found with your furnace heat exchanger or car engine.

Notice: During manufacture, components of this fireplace insert are treated with oils, films or bonding agents. These are not harmful, but may produce smoke and smells as they are burned off during the initial operation of the fireplace insert. This is normal. Open a window to ventilate the area.

Only glass approved for use by the manufacturer in fireplace may be used for replacement. The glass replacement must be done by a licensed or qualified service person.

⚠ WARNING

1. **The use of substitute glass will void all product warranties.**
2. **Avoid breaking the glass.**
3. **Do not operate this appliance without the glass front or with a broken glass front. Have a qualified service person replace damaged glass using materials specified by Empire Comfort Systems.**
4. **Do not abuse or strike the glass.**

⚠ CAUTION

Do not use Ammonia based or abrasive cleaners on glass. Do not attempt to clean glass when glass is hot.

Combustible Material

Do not attach combustible material to the mantel of your fireplace. This is a fire hazard.

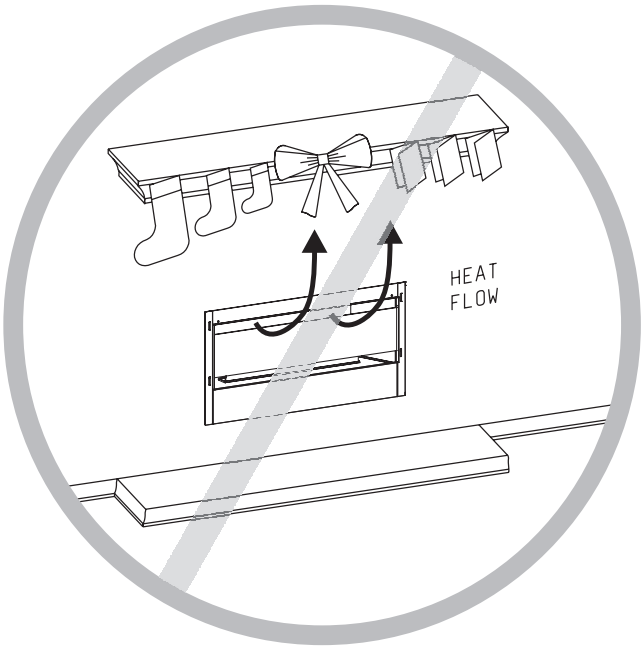

Figure A

REMOVING & REPLACE THE GLASS FRONT

Removing the Glass Front

1. Lift the glass front up, slide it to the right, and then carefully angle left side out of the slots. **See Figures B.**

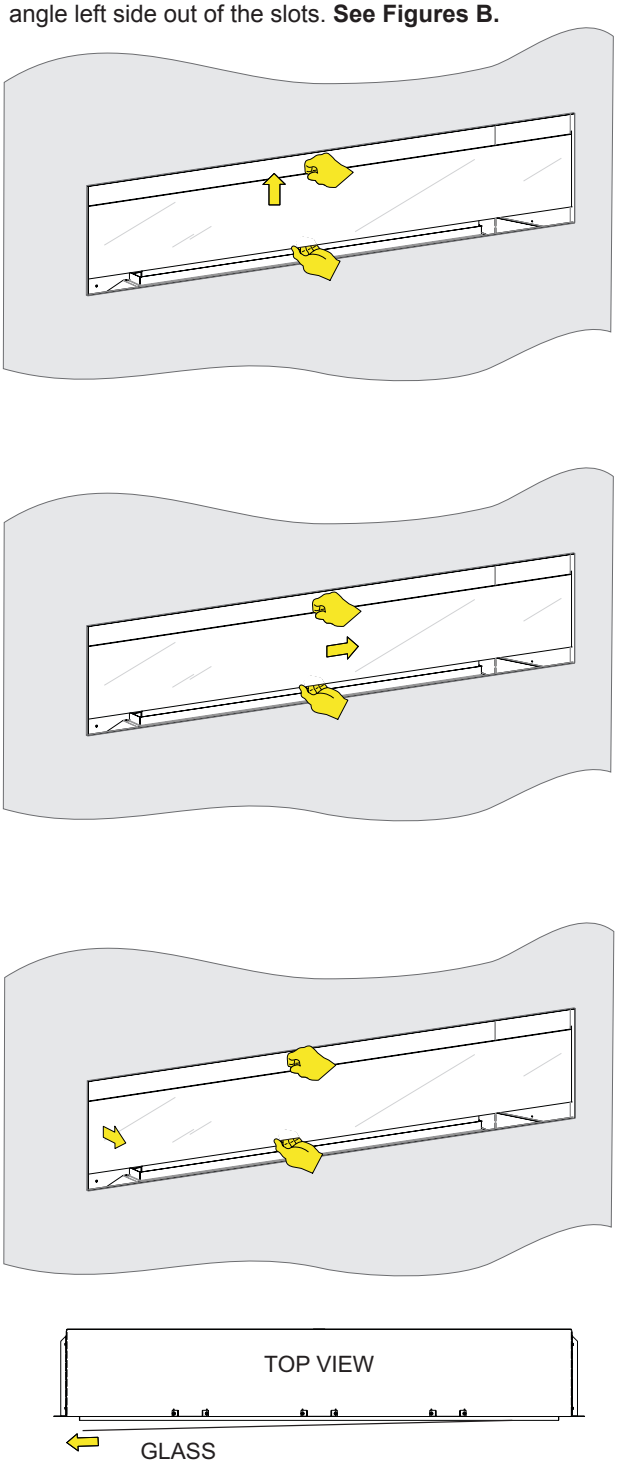

Figure B

Replacing the Glass Front

1. Place the right side of the glass into the slots in the firebox. Carefully angle in the left side of the glass and then slide the glass to the left. Settle the glass into the slots by gently lowering it. **See Figure C.**

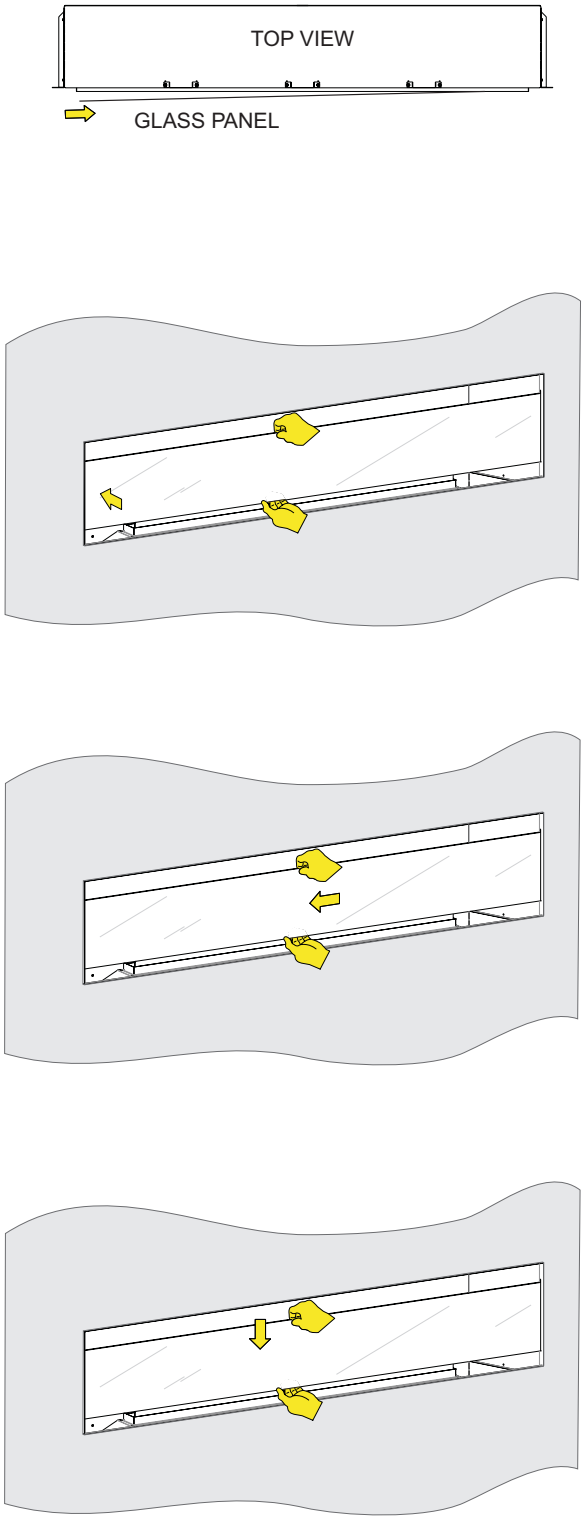

Figure C

DECORATIVE GLASS & ROCK PLACEMENT

The Decorative Glass options are available in various colors and package sizes. Choose the size appropriate for your fireplace. See list on page 9.

⚠ CAUTION

Crushed glass and Glass droplets must not be more than a single layer. Do not use more glass than recommended.

⚠ CAUTION

Never place media materials on or next to the burner.

⚠ CAUTION

Use gloves and eye protection while applying the decorative glass or droplets.

⚠ CAUTION

Do not use real rocks or glass. Use decorative rocks and decorative glass from the accessories listed on page 9.

1. Apply the crushed glass to the shaded area only. **See Figure D.** Use enough to cover the floor of the fireplace, but do not allow the media to reach higher than the flange surrounding the burner. Never place decorative media inside the flange surrounding the burner itself.
   This fireplace uses crushed glass. Accent glass droplets (1/2 inch) or glass drops (1 inch), and ceramic fiber rocks and pebbles. Mix colors and glass types, but do not exceed the recommended amount of decorative media.

⚠ CAUTION

Glass or rocks must not be placed around the ends or over the front edge of the burner assembly. Do not restrict air flow.

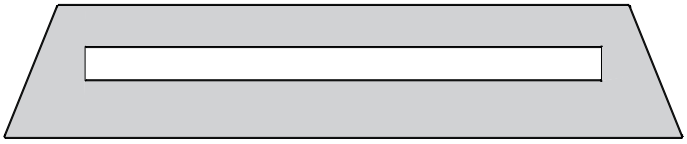

Figure D

QUANTITY OF GLASS	
Model	**Amount**
VFLL60FP	5 square feet
VFLL72FP	6 square feet

LIGHTING INSTRUCTIONS

FOR YOUR SAFETY READ BEFORE LIGHTING

⚠ WARNING

If you do not follow these instructions exactly, a fire or explosion may result causing property damage, personal injury or loss of life.

A. This appliance has a pilot which must be lighted by hand. When lighting the pilot, follow these instructions exactly.

B. Before lighting smell all around the appliance area for gas. Be sure to smell next to the floor because some gas is heavier than air and will settle on the floor.

What To Do If You Smell Gas
- Do not try to light any appliance.
- Do not touch any electrical switch;
- Do not use any phone in your building.
- Immediately call your gas supplier from a neighbor's phone. Follow the gas supplier's instructions.
- If you cannot reach your gas supplier, call the fire department.

C. If applicable, use only your hand to turn the gas shutoff valve. Never use tools. If the handle will not turn by hand, don't try to repair it; call a qualified service technician. Force or attempted repair may result in a fire or explosion.

D. Do not use this appliance if any part has been under water. Immediately call a qualified service technician to inspect the appliance and to replace any part of the control system and any gas control which has been under water.

LIGHTING INSTRUCTIONS

1. STOP! Read the safety information above.
2. Turn OFF electric power to the appliance.
3. Remove front surround panel assembly or bottom louver if included.
4. Turn gas shutoff valve counterclockwise ↺ to On position.
5. Wait ten (10) minutes to clear out any gas. Then smell for gas, including near the floor. If you smell gas, STOP! Follow B in the safety information above on this page. If you do not smell gas, go to the next step.
6. Turn ON electric power to the appliance.
7. Find pilot - Follow metal tube from gas control. The pilot is behind the burner on the right side.
8. Turn main flame to on. If the pilot does not light within 60 seconds, stop and go to Step 5.
9. Refer to remote control instructions for detailed information, control features, and operation. ***Notice:*** There is a CPI/IP switch behind the right side panel that allows for a continuous standing pilot mode or an intermittent pilot mode. See appliance manual for location of this switch. If the pilot or burner does not stay lit (in the standing pilot mode), stop and immediately call a qualified service technician or gas supplier.
10. If the burner or pilot does not operate properly after several tries, turn the gas valve clockwise ↻ to OFF and call your service technician or gas supplier.
11. Replace the front surround assembly or close bottom louver assembly.
12. Operation of the gas valve is controlled by a manual on/off switch or a hand held remote control. Refer to remote instructions for detailed operation information.

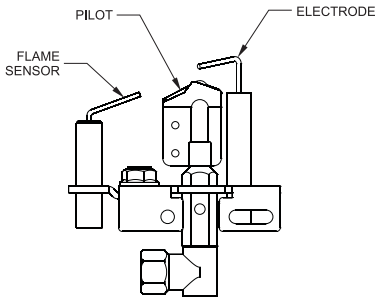

GAS SHUTOFF VALVE

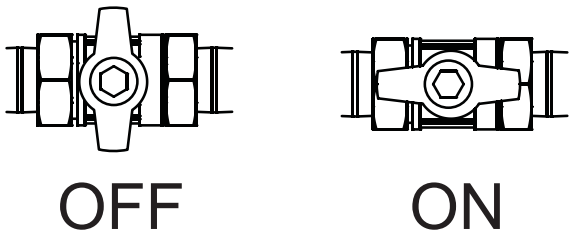

TO TURN OFF GAS TO FIREPLACE

1. Set REMOTE/OFF/ON switch to OFF.
2. Turn off all electric power to the appliance if service is to be performed (if applicable).
3. Turn gas shutoff clockwise ↻ to OFF. Do not force.

LED & FIREPLACE WALL CONTROLS

LED Brightness Button

Press the LED Brightness Button to activate the LED lights and to cycle LED Intensity from High to Low to Off.

1 – On – High
2 – Medium
3 – Low
4 – Off

Use the Brightness Button in conjunction with the Mode Button to create unique looks.

If no change is made to the LED lights, they will turn off automatically after two hours.

Lights will remember the last Mode when turned on again. (After a power failure, you must reset the lights to the desired Mode.)

Turn off the LED Lights when not in use.

LED Mode Button

Press the Mode Button to adjust LED light system from Automatic Color Changes to Individual Colors.

1 – Auto-cycle – Rapid
2 – Auto-cycle – Gradual
3 – Pause Auto-cycle
4 – Deep Blue
5 – Royal Violet
6 – Cardinal Red
7 – Sea Green
8 – Forest Green
9 – Tranquil Blue
10 – White

Note: LED lights will automatically turn off after two hours.

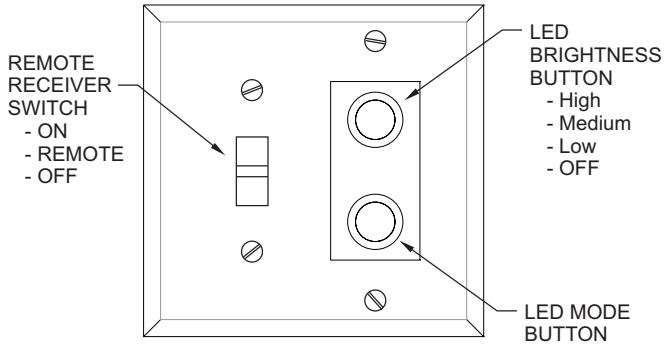

Figure F

BATTERY REPLACEMENT

To replace the batteries in an intermittent unit, follow these steps:

1. Remove the cover from the electrical box on the wall.
2. Replace the batteries inside the box.
3. Replace the cover.

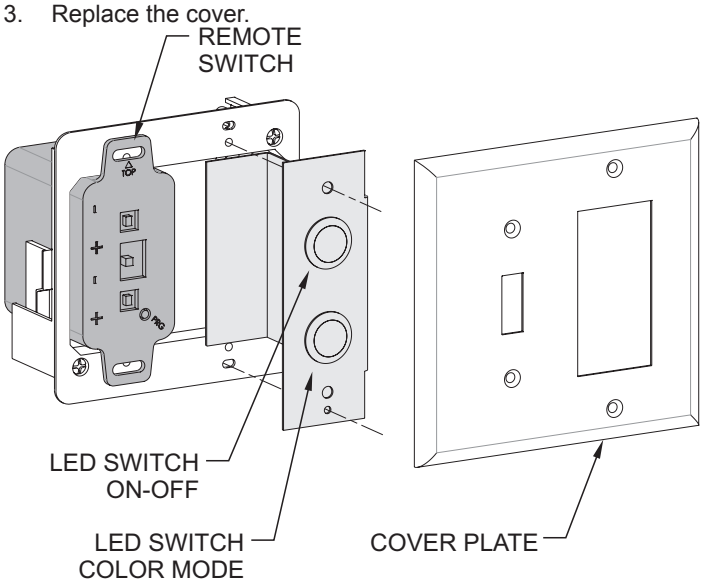

Figure G

USING THE REMOTE CONTROL

⚠ CAUTION

The transmitter and receiver are radio frequency devices. Placing the receiver in or near metal may severely reduce the signal range.

Attention:

- Turn OFF the main gas supply of the fireplace during installation or maintenance of the receiver.
- Place the receiver's 3-position slider switch in the OFF position during installation or maintenance.
- Turn OFF main gas supply to the fireplace prior to removing or reinserting the batteries in the receiver.

⚠ WARNING

Fire Hazard. The Receiver lights the fireplace. The fireplace can turn on suddenly. Keep away from the fireplace burner when operating the remote system or activating manual bypass of the remote system.

⚠ WARNING

Property Damage Hazard. Excessive heat can cause property damage. The fireplace can stay lit for many hours. Turn off the fireplace if it is not going to be attended for any length of time. Always place the Transmitter where children can not reach it.

Transmitter (Remote Control with LCD Display)

The Proflame Transmitter uses a streamline design with a simple button layout and informative LCD display (Figure H).
The Transmitter is powered by 3 AAA type batteries. A Mode Button is provided to Index between the features and a Thermostat Button is used to turn on/off or index through thermostat functions (Figures H and I).

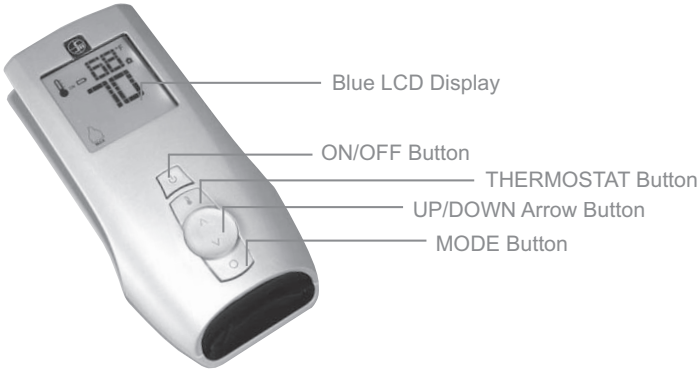

Figure H - Proflame Transmitter (Remote Control)

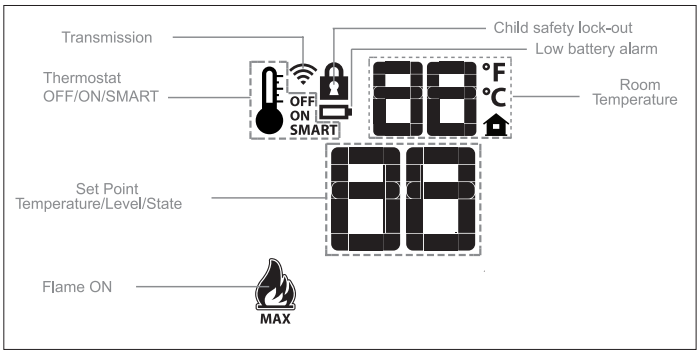

Figure I - Transmitter LCD display

USING THE REMOTE CONTROL

Initializing the System

Install the 4 AA batteries into the receiver battery bay. Note the polarity of battery and insert into the battery bay as indicated on the Battery cover (+/-). Place the 3 position slider switch in the Remote position.

Using the end of a paper clip, or other similar object, insert the end of the paper clip into the hole marked PRG on the Receiver front cover. The Receiver will beep three times to indicate that it is ready to synchronize with a Transmitter. Install the 3 AAA type batteries in the Transmitter battery bay, located on the base of the Transmitter. With the batteries already installed in the Transmitter, push the On button. The Receiver will beep four times to indicate the Transmitter's command is accepted and sets to the particular code of that Transmitter. The system is now initialized.

Temperature Indication Display

With the system in the OFF position, press the Thermostat Button and the Mode Button at the same time. Look at the LCD screen on the Transmitter to verify that a C or F is visible to the right of the Room Temperature display. (Figures J and K)

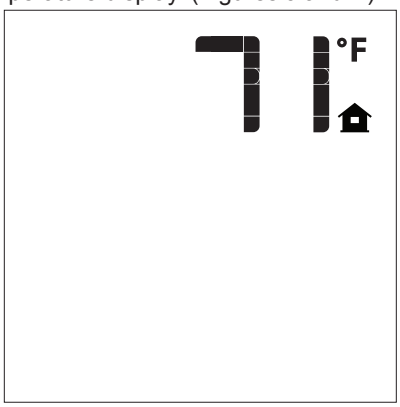

Figure J - Fahrenheit

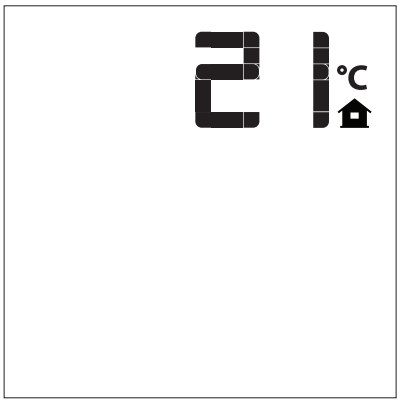

Figure K - Celsius

Turn On the Fireplace

Press the ON/OFF Button on the Transmitter. The Transmitter display will show all active Icons on the screen. At the same time the Receiver connects the thermopile to the gas valve millivolt coil and the fireplace main burner turns on. A single beep from the Receiver will confirm reception of the command.

Turn Off the Fireplace

Press the ON/OFF Button on the Transmitter. The Transmitter LCD display will only show the room temperature and Icon (Figure L). At the same time the Receiver disconnects the thermopile from the gas valve millivolt coil and the fireplace burner turns off. A single beep from the Receiver confirms reception of the command.

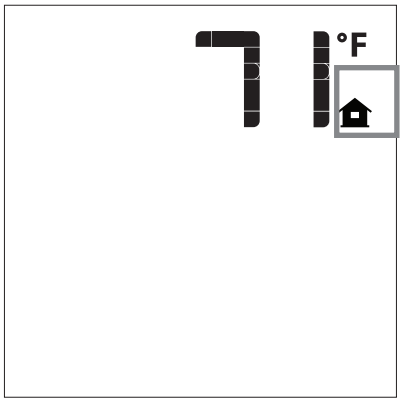

Figure L

Remote Flame Control

The Proflame GTM has six flame levels. With the system on, and the flame level at the maximum in the fireplace, pressing the Down Arrow Button once will reduce the flame height by one step until the flame is turned off. The Up Arrow Button will increase the flame height each time it is pressed. If the Up Arrow Button is pressed while the system is on but the flame is off, the flame will come on in the high position (Figure M - P). A single beep will confirm reception of the command.

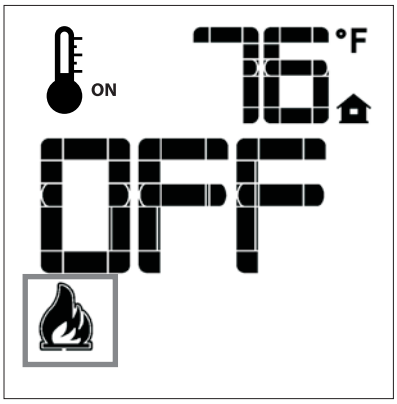

Figure M

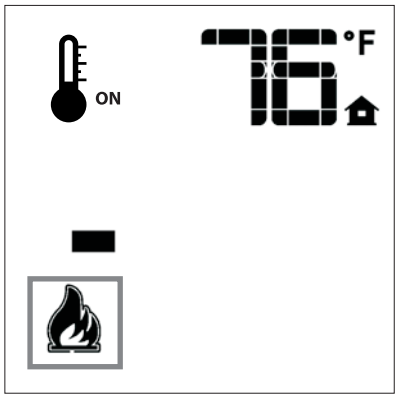

Figure N

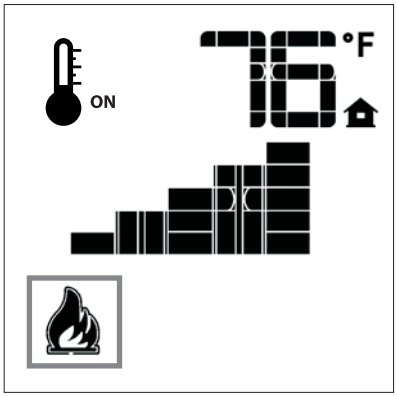

Figure O

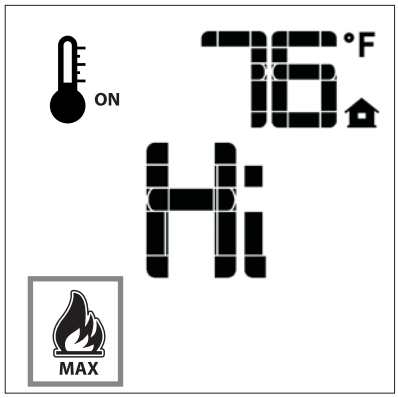

Figure P

USING THE REMOTE CONTROL

Thermostat Operation

The Remote Control can operate as a room thermostat. The thermostat can be set to a desired temperature to control the comfort level in a room.

To activate this function, press the Thermostat Button (Figure H). The LCD display on the Transmitter will change to show that the room thermostat is ON and the set temperature is now displayed (Figures Q and R). To adjust the set temperature, press the Up or Down Arrow Buttons until the desired set temperature is displayed on the LCD screen of the Transmitter.

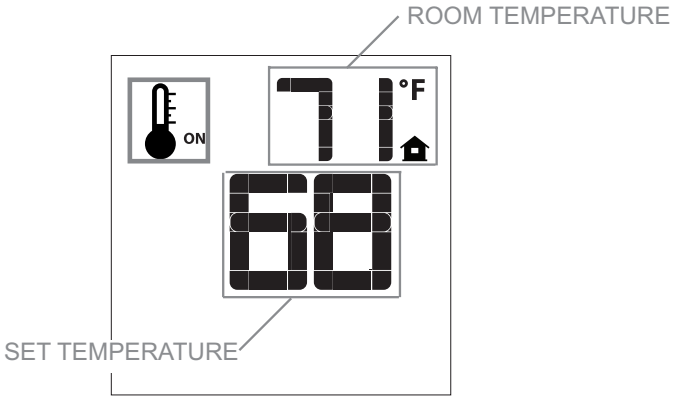

Figure Q

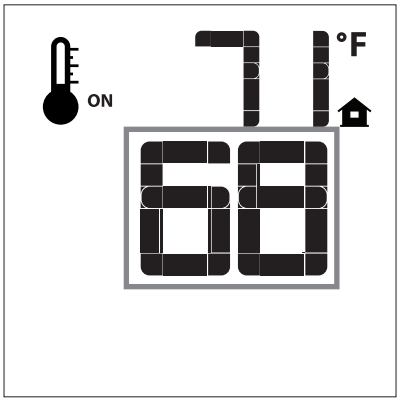

Figure R

Smart Thermostat (Transmitter Operation)

The Smart Thermostat function adjusts the flame height in accordance to the difference between the set point temperature and the actual room temperatures. As the room temperature gets closer to the set point the Smart Function will modulate the flame down.

To activate this function, press the Thermostat Button (Figure H) until the word SMART appears to the right of the temperature bulb graphic (Figure S). To adjust the set temperature, press the Up or Down arrow Buttons until the desired set point temperature is displayed on the LCD screen of the Transmitter (Figure T).

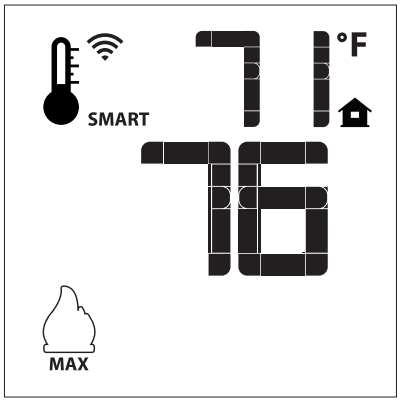

Figure S

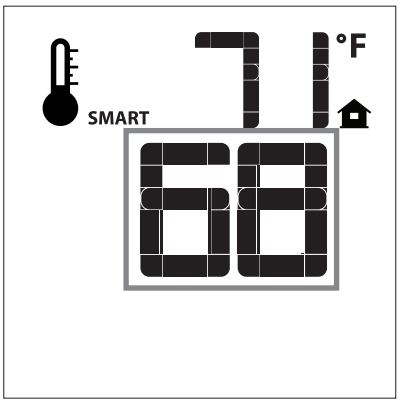

Figure T

USING THE REMOTE CONTROL

Button Lock

This function will lock the buttons to avoid unsupervised operation.

To activate this function, press the MODE and the UP Arrow Button at the same time (Figure U).

To de-activate this function, press the MODE and the UP Arrow Button at the same time.

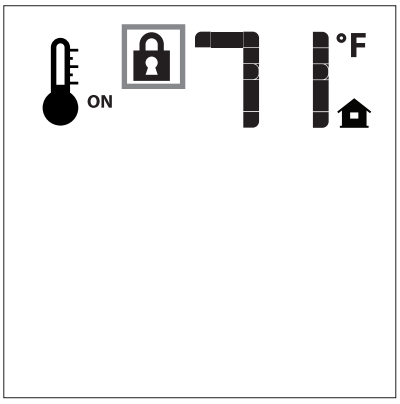

Figure U

Low Power Battery Indicator

Transmitter

The life span of the remote control batteries depends on various factors: quality of the batteries used, the number of ignitions of the fireplace, the number of changes to the room thermostat set point, etc.

When the Transmitter batteries are low, a Battery Icon will appear on the LCD display of the Transmitter (Figure V) before all battery power is lost. When the batteries are replaced this Icon will disappear.

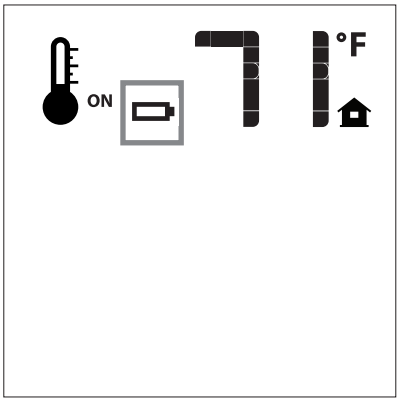

Figure V

Receiver

The life span of the Receiver batteries depends on various factors: quality of the batteries used, the number of ignitions of the fireplace, the number of changes to the room thermostat set point, etc.

When the Receiver batteries are low, No beep will be emitted from the Receiver when it receives an On/Off command from the Transmitter. This is an alert for a low battery condition for the Receiver. When the batteries are replaced the beep will be emitted from the Receiver when the ON/OFF Button is pressed (See Initialization of The System).

Manual Bypass of the Remote System

If the batteries of the Receiver or Transmitter are low or depleted, the fireplace can be turned on manually by sliding the three position slider switch on the Wall Control to the ON position. This will bypass the remote control feature of the system and the fireplace main burner will come on if the gas valve is in the On position.

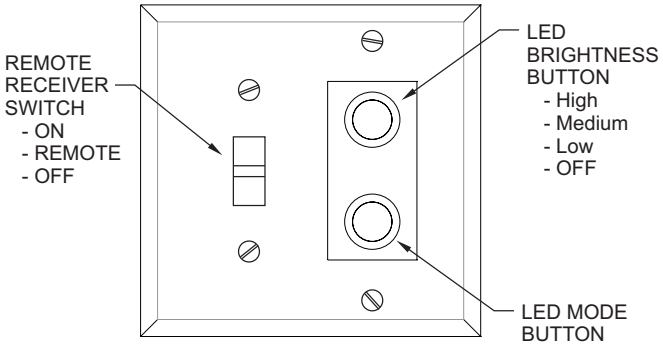

Figure W

WARRANTY

Empire Comfort Systems Inc. warranties this hearth product to be free from defects at the time of purchase and for the periods specified below. Hearth products must be installed by a qualified technician and must be maintained and operated safely, in accordance with the instructions in the owner's manual. Empire will not warranty any Boulevard fireplace that is not installed by the selling dealer or that dealer's direct contract agents.
This warranty applies to the original purchaser only and is not transferable. All warranty repairs must be accomplished by a qualified gas appliance technician.

Limited Lifetime Parts Warranty with a Five-Year Limited Labor Warranty – Combustion Chamber and Heat Exchanger

- If the combustion chamber or heat exchanger (see parts list) fails because of defective workmanship or material, Empire will repair or replace at Empire's option.
- Within five years from the date of purchase, Empire will pay reasonable labor to have the defective part repaired or replaced at Empire's option.

Limited Five-Year Parts & Labor Warranty – All Other Components
(Except Remote Controls, Thermostats, Lights, Accessories and Replacement Parts)

- Should any part fail because of defective workmanship or material within five years from the date of purchase, Empire will repair or replace at Empire's option.
- Within five years from the date of purchase, Empire will pay reasonable labor to have that defect repaired at Empire's option.

Limited One-Year Parts Warranty – Remote Controls, Thermostats, Lights, Accessories, and Replacement Parts

- Should any remote control, thermostat, lighting system component, replacement part fail because of defective workmanship within one year from the date of purchase, Empire will repair or replace at Empire's option.

Duties Of The Owner

- The appliance must be installed by a qualified installer and operated in accordance with the instructions furnished with the appliance.
- A bill of sale, cancelled check, or payment record should be kept to verify purchase date and establish warranty period.
- Ready access to the appliance for service.

What Is Not Covered

- Damages that might result from the use, misuse, or improper installation of this appliance. Travel, diagnostic costs and freight charges on warranted parts to and from the factory.
- Claims that do not involve defective workmanship or materials.
- Unauthorized service or parts replacements.
- Removal and reinstallation cost.
- Inoperable due to improper or lack of maintenance.

How To Get Service

- To make a claim under this warranty, please have your receipt available and contact your installing dealer. Provide the dealer with the model number, serial number, type of gas, and purchase verification. The installing dealer is responsible for providing service and will contact the factory to initiate any warranted parts replacements. Empire will make replacement parts available at the factory. Shipping expenses are not covered.
- If, after contacting your Empire dealer, service received has not been satisfactory, contact: Consumer Relations Department, Empire Comfort Systems Inc., PO Box 529, Belleville, Illinois 62222, or send an e-mail to info@empirecomfort.com with Consumer Relations in the subject line.

Your Rights Under State Law

- This warranty gives you specific legal rights, and you may also have other rights, which vary from state to state.

This page intentionally left blank.

Empire Comfort Systems Inc.
Belleville, IL

If you have a general question about our products, please e-mail us at info@empirecomfort.com.

If you have a service or repair question, please contact your dealer.

www.empirecomfort.com

36776-6-0618